Product Approval
USER: Public User

FL #	FL1850-R15
Application Type	Revision
Code Version	2023
Application Status	Approved
Comments	
Archived	
Product Manufacturer	American Shutter Systems Association, Inc.
Address/Phone/Email	4268 Westroads Drive West Palm Beach, FL 33407 (561) 209-8263 bfeeley@easternmetal.com
Authorized Signature	Bill Feeley lrodriguez@easternmetal.com
Technical Representative Address/Phone/Email	
Quality Assurance Representative Address/Phone/Email	
Category	Shutters
Subcategory	Accordion
Compliance Method	Evaluation Report from a Florida Registered Architect or a Licensed Florida Professional Engineer Evaluation Report - Hardcopy Received
Florida Engineer or Architect Name who developed the Evaluation Report	Walter A. Tillit, Jr., P.E.
Florida License	PE-44167
Quality Assurance Entity	National Accreditation and Management Institute
Quality Assurance Contract Expiration Date	12/31/2025
Validated By	John Henry Kampmann Jr. Validation Checklist - Hardcopy Received
Certificate of Independence	FL1850_R15_COI_Certification of Independence Drawig 23-130.pdf FL1850_R15_COI_Certification of Independence Drawing 23-128.pdf FL1850_R15_COI_CERTIFICATION OF INDEPENDENCE DRAWING 23-129.pdf

Referenced Standard and Year (of Standard)

Standard	Year
ASTM E1886	2012
ASTM E1996	2012
ASTM E330	2002
TAS 201, 202, 203	1994

Equivalence of Product Standards Certified By	Florida Licensed Professional Engineer or Architect FL1850_R15_Equiv_Letter 23-450.pdf
Sections from the Code	
Product Approval Method	Method 1 Option D
Date Submitted	10/14/2023
Date Validated	10/17/2023
Date Pending FBC Approval	10/22/2023
Date Approved	12/12/2023

Summary of Products

FL #	Model, Number or Name	Description
1850.1	Bertha HV Accordion -Blade 3 (HVHZ) Drawing# 23-129	Extruded aluminum blades folded together thru knuckles and retained by tracks to provide hurricane protection.
Limits of Use **Approved for use in HVHZ:** Yes **Approved for use outside HVHZ:** Yes **Impact Resistant:** Yes **Design Pressure:** N/A **Other:** Large Missile Level "D". Max span is 12'-7" for 35 psf positive ASD load and 13'-0" for 35 psf negative ASD load for one specific condition shown in span tables. See additional loads and spans on engineered drawings.		**Installation Instructions** FL1850_R15_II_DRAWING 23-129.pdf Verified By: American Test Lab of South Florida, Inc. Created by Independent Third Party: Yes **Evaluation Reports** FL1850_R15_AE_PRODUCT EVALUATION REPORT DRAWING 23-129.pdf Created by Independent Third Party: Yes
1850.2	Bertha HV Accordion Shutter (Combo) - HVHZ - Drawing#23-128	Extruded aluminum interlocking blades retained by tracks (top and bottom) for storm protection
Limits of Use **Approved for use in HVHZ:** Yes **Approved for use outside HVHZ:** Yes **Impact Resistant:** Yes **Design Pressure:** N/A **Other:** Large Missile Level "D". Max. span is 13'-2" for 30 psf positive ASD load w/o window blade, 16'-0" for 30 psf negative ASD load for HV1 blade w/o window blade for conditions indicated on schedule #1, sheet 12. And 12'-3" for 30 psf positive ASD load w/o window blade and 15'-5 for 30 psf negative ASD load for HV2 blade w/o window blade. See sheets number 12, 25, 28 and 28A of installation drawings for other spans and pressures.		**Installation Instructions** FL1850_R15_II_Drawing 23-128.pdf Verified By: American Test Lab of South Florida, Inc. Created by Independent Third Party: Yes **Evaluation Reports** FL1850_R15_AE_Product Evaluation Report Drawing 23-128.pdf Created by Independent Third Party: Yes
1850.3	Bertha HV Accordion Shutter - Blade 1 Only (HVHZ) - Drwg# 23-130	Extruded aluminum interlocking blades retained by tracks (top and bottom) for storm protection
Limits of Use **Approved for use in HVHZ:** Yes **Approved for use outside HVHZ:** Yes **Impact Resistant:** Yes **Design Pressure:** N/A **Other:** Large missile level "D". Max. span is 16'-0" and 14'-9" for 30 psf ASD negative load depending on centermates and locking rod configuration for the HV1 blade, 8'-0" for +64, -72 psf load for HV blade for Keystone mountings 7'-0" for +75, -75 psf for metals stud mountings and 8'-0" for 110 psf. for HV1 and HV1A working in unison. See sheets 7, 11, 20 and 19 respectively of installation drawings for other spans and pressures.		**Installation Instructions** FL1850_R15_II_Drawing 23-130.pdf Verified By: American Test Lab of South Florida, Inc. Created by Independent Third Party: Yes **Evaluation Reports** FL1850_R15_AE_Product Evaluation Report Drawing 23-130.pdf Created by Independent Third Party: Yes

Back Next

Contact Us :: 2601 Blair Stone Road, Tallahassee FL 32399 Phone: 850-487-1824

The State of Florida is an AA/EEO employer. Copyright 2007-2013 State of Florida. :: Privacy Statement :: Accessibility Statement :: Refund Statement

Under Florida law, email addresses are public records. If you do not want your e-mail address released in response to a public-records request, do not send electronic mail to this entity. Instead, contact the office by phone or by traditional mail. If you have any questions, please contact 850.487.1395. *Pursuant to Section 455.275(1), Florida Statutes, effective October 1, 2012, licensees licensed under Chapter 455, F.S. must provide the Department with an email address if they have one. The emails provided may be used for official communication with the licensee. However email addresses are public record. If you do not wish to supply a personal address, please provide the Department with an email address which can be made available to the public. To determine if you are a licensee under Chapter 455, F.S., please click here .

Product Approval Accepts:

Credit Card
Safe
securityMETRICS

GENERAL NOTES:

1. BERTHA H.V. ACCORDION SHUTTER SYSTEM WITH H.V. BLADE #3 W/ OR W/O H.V. WINDOW BLADE #3 SHOWN ON THIS PRODUCT EVALUATION DOCUMENT (P.E.D.) HAS BEEN VERIFIED FOR COMPLIANCE IN ACCORDANCE WITH THE 2023 (8th EDITION) OF THE FLORIDA BUILDING CODE. THIS ACCORDION SHUTTER SYSTEM MAY BE INSTALLED AT HIGH VELOCITY HURRICANE ZONES.

   DESIGN WIND LOADS SHALL BE DETERMINED AS PER SECTION 1620 OF THE ABOVE MENTIONED CODE, FOR A BASIC WIND SPEED REQUIRED BY THE JURISDICTION WHERE SHUTTER WILL BE INSTALLED WITH A DIRECTIONALITY FACTOR Kd=0.85, USING ASCE 7-22 AND SHALL NOT EXCEED THE MAXIMUM (A.S.D.) DESIGN PRESSURE RATINGS INDICATED ON SHEETS 5, 6, 7, 8 & 18.

   IN ORDER TO VERIFY THE ABOVE CONDITION, ULTIMATE DESIGN WIND LOADS DETERMINED PER ASCE 7-22 SHALL BE FIRST REDUCED TO A.S.D. DESIGN WIND LOADS BY MULTIPLYING THEM BY 0.6 IN ORDER TO COMPARE THESE W/ MAX. (A.S.D) DESIGN PRESSURE RATINGS INDICATED ON SHEETS 5, 6, 7, 8 & 18.

   IN ORDER TO VERIFY THAT ANCHORS ON THIS P.E.D., AS TESTED, WERE NOT OVER STRESSED, A 33 % INCREASE IN ALLOWABLE STRESS FOR WIND LOADS WAS ANALYSIS. A WIND LOAD DURATION FACTOR Cd=1.60 WAS USED FOR VERIFICATION OF FASTENERS SPACING IN WOOD, PER NDS 2018.

   BERTHA H.V. ACCORDION SHUTTER SYSTEM WITH H.V. BLADE #3 W/ OR W/O H.V. WINDOW BLADE #3 ADEQUACY FOR WIND AND IMPACT LOADS HAS BEEN VERIFIED IN ACCORDANCE WITH SECTION 1626 OF THE ABOVE MENTIONED CODE AS PER AMERICAN TEST LAB OF SOUTH FLORIDA REPORTS:

   - (1) H.V. BLADE #3 #0403.01-08 WITH ADDENDUMS #3 & #3A, DATED 4/30/14, 0825.01-10 (WITH ADDENDUM #2, DATED 4/30/14), 1220.01-10, 1209.01-10 & 0422.02-14 , AS PER PROTOCOLS TAS-201, TAS 202 & TAS-203, LARGE MISSILE.
   - (1) H.V. BLADE #3 WORKING IN UNISON WITH (1A) H.V. WINDOW BLADE #3 #0829.01-08 WITH ADDEMDUM #2, DATED 4/30/14, AS PER PROTOCOLS TAS-201, TAS 202 & TAS-203, LARGE MISSILE.
   - (1) H.V. BLADE #3 AND (1A) H.V. WINDOW BLADE #3 ARE ENGINEERED TO WORK IN UNISON WITH EACH OTHER UNDER THE GENERAL LIMITATIONS AND CONDITIONS OF USE INDICATED ON SHEET 18.

2. BERTHA ACCORDION PINS (33), (34), (35) OR ALTERNATE (38), SHALL BE AS INDICATED ON SHEETS 3 & 4, USED AT BLADE'S KNUCKLE . ACCORDION PINS (32) , USED AT HV DIRECT MOUNT SHALL BE AS INDICATED ON SHEET 3. PINS SHALL BE 410-HT MINIMUM SERIES STAINLESS STEEL SCREWS WITH 173.6 KSI YIELD STRENGTH AND 187.4 KSI TENSILE STRENGTH. PINS SHALL BE COATED WITH BERTHA HV DACROSHIELD COATING SYSTEM AS MANUFACTURED BY APPROVED COATING APPLICATORS, REGISTERED WITH AMERICAN SHUTTER SYSTEMS ASSOCIATION.

3. ALL ALUMINUM EXTRUSIONS SHALL BE ALUMINUM ASSOCIATION 6063-T6 ALLOY AND TEMPER, WITH Fy = 27.1 ksi MINIMUM (UNLESS OTHERWISE NOTED). ALL ALUMINUM EXTRUSIONS IN CONTACT WITH DISSIMILAR MATERIALS SHALL COMPLY WITH SECTION III-6 OF THE 2020 ALUMINUM DESIGN MANUAL.

4. ALL SCREWS TO BE STAINLESS STEEL 304 OR 316 AISI SERIES OR CORROSION RESISTANT COATED CARBON STEEL AS PER DIN 50018 50 ksi YIELD STRENGTH AND 90 ksi TENSILE STRENGTH & SHALL COMPLY W/ FLORIDA BUILDING CODE SECTION 2411.3.3.4.

5. BOLTS TO BE ASTM A-307 GALVANIZED STEEL, OR AISI 304 SERIES STAINLESS STEEL WITH 35 ksi MINIMUM YIELD STRENGTH.

6. SEE SHEETS 6 & 8 FOR ANCHORS SPECIFICATIONS ON DIFFERENT SUBSTRATES.

7. THIS BERTHA H.V. ACCORDION SHUTTER SYSTEM BEARS A U.S. PATENT #6779582. COMPONENTS OF THIS APPROVAL ARE COVERED, IN WHOLE OR IN PART BY U.S. PATENT #5458179 ISSUED TO EASTERN METAL SUPPLY, INC.

8. IT SHALL BE THE RESPONSIBILITY OF THE CONTRACTOR TO VERIFY THE SOUNDNESS OF THE STRUCTURE WHERE SHUTTER IS TO BE ATTACHED TO INSURE PROPER ANCHORAGE. CONTRACTOR TO SEAL/CAULK ALL SHUTTER COMPONENT EDGES WHICH REMAIN, THRU FASTENING IN CONTINUOUS CONTACT WITH THE BUILDING TO PREVENT WIND/RAIN INTRUSION.

9. EACH UNIT MUST BEAR PERMANENT LABEL IN A VISIBLE PLACE WITH WARNING NOTE: DURING PERIODS OF HURRICANE WARNINGS HOME OWNER, TENANT, OR OTHERS, MUST PROPERLY CLOSE ALLCENTERMATES AND ENGAGE OR LOCK ALL LOCKS

10. SHUTTER MANUFACTURER'S LABEL SHALL BE LOCATED ON A READILY VISIBLE LOCATION AT ACCORDION SHUTTER IN ACCORDANCE WITH SECTION 1709.9.2 OF FLORIDA BUILDING CODE. ONE LABEL SHALL BE PLACED FOR EVERY OPENING.

11. BERTHA H.V. ACCORDION SHUTTER SYSTEM WITH H.V. BLADE #3 W/ OR W/O H.V. WINDOW BLADE #3 INSTALLATION SHALL COMPLY WITH SPECS INDICATED IN THIS DRAWING PLUS ANY BUILDING AND ZONING REGULATIONS PROVIDED BY THE JURISDICTION WHERE PERMIT IS APPLIED TO.

12. (a) THIS P.E.D. PREPARED BY THIS ENGINEER IS GENERIC AND DOES NOT PROVIDE INFORMATION FOR A SITE SPECIFIC PROJECT; I.e. WHERE THE SITE CONDITIONS DEVIATE FROM THE P.E.D.

    (b) CONTRACTOR TO BE RESPONSIBLE FOR THE SELECTION, PURCHASE AND INSTALLATION INCLUDING LIFE SAFETY OF THIS PRODUCT, BASED ON THIS P.E.D., PROVIDED HE/SHE DOES NOT DEVIATE FROM THE CONDITIONS DETAILED ON THIS DOCUMENT. CONSTRUCTION SAFETY AT SITE IS THE CONTRACTOR'S RESPONSIBILITY.

    (c) THIS P.E.D. WILL BE CONSIDERED INVALID IF ALTERED BY ANY MEANS.

    (d) SITE SPECIFIC PROJECTS SHALL BE PREPARED BY A FLORIDA REGISTERED ENGINEER OR ARCHITECT WHICH WILL BECOME THE ENGINEER OF RECORD (E.O.R.) FOR THE PROJECT AND WHO WILL BE RESPONSIBLE FOR THE PROPER USE OF THE P.E.D. ENGINEER OF RECORD, ACTING AS A DELEGATED ENGINEER TO THE P.E.D. ENGINEER SHALL SUBMIT TO THIS LATTER THE SITE SPECIFIC DRAWINGS FOR REVIEW.

    (e) ORIGINAL P.E.D. SHALL BEAR THE DATE AND ORIGINAL SEAL AND SIGNATURE OF THE PROFESSIONAL ENGINEER OF RECORD THAT PREPARED IT.

TABLE OF CONTENTS

AREA 1: HV BLADES (1) & (1A)

GENERAL NOTES.		SHEET 1
SYSTEM COMPONENTS.	1-21	SHEET 2
SYSTEM COMPONENTS.	22-36	SHEET 3
TYPICAL SHUTTER ASSEMBLY.		SHEET 3A

AREA 2: HV BLADE (1) AND HV WINDOW BLADE (1A) (WHERE APPLICABLE)

TYPICAL SHUTTER ELEVATION & NOTES ON LOCKS.	SHEET 4
MAXIMUM SPAN TABLES.	SHEET 5
ANCHOR SCHEDULE- CONCRETE	SHEET 6
ANCHOR SCHEDULE- CONCRETE & BLOCK.	SHEET 7
ANCHOR SCHEDULE- WOOD	SHEET 8
INSTALLATION DETAILS 1-6 -CONCRETE & BLOCK	SHEET 9
INSTALLATION DETAILS 7-9 -CONCRETE & BLOCK	SHEET 10
INSTALLATION DETAILS 10 -METAL STUD	SHEET 10A
INST. DETAILS W/ HV CENTERMATES (13) & (14)	SHEET 11
INST. DETAILS W/ HV "T" LOCK CENTERMATES (18) & (19)	SHEET 12
INST. DETAILS W/ HD CENTERMATES (22), (23) & (24)	SHEET 12
END CONNECTION DETAILS 1-6-CONCRETE & BLOCK	SHEET 13
INSTALLATION DETAILS 1W-6W -WOOD	SHEET 14
INSTALLATION DETAILS 7W-10W -WOOD	SHEET 15
END CONNECTION DETAILS 1-6-WOOD	SHEET 16

AREA 3: HV WINDOW BLADE (1A) ONLY

TYPICAL WINDOW BLADE & WINDOW DETAIL	SHEET 17
TYPICAL SHUTTER ELEVATION	SHEET 18

THIS DRAWING SHALL ONLY BE USED TO OBTAIN PERMITS IN THE STATE OF FLORIDA

FLORIDA BUILDING CODE (High Velocity Hurricane Zone)

No. 44167 STATE OF FLORIDA

7/21/2023

P.E. SEAL/SIGNATURE/DATE

© 2023 TILTECO, INC.

TILTECO INC.

TILLIT TESTING & ENGINEERING COMPANY
6355 N.W. 36th. St., Ste. 303, VIRGINIA GARDENS, FLORIDA 33166
Phone : (305)871-1530 . Fax : (305)871-1531
e-mail: tilteco@aol.com
CA-0006719
WALTER A. TILLIT Jr. P.E.
FLORIDA Lic. # 44167

A.S.S.A.
American Shutter Systems Association, Inc.
4268 Westroads Drive
West Palm Beach, FL 33407

© 2020 EASTERN METAL SUPPLY, INC.

BERTHA HV™
Accordion Shutter System
H.V. BLADE #3 W/ OR W/O H.V. WINDOW BLADE #3

REV. No	DESCRIPTION	DATE
1	OLD 20-160	07/21/23
2		
3		
4		
5		
6		

DRAWN BY: Y.M.
DATE: 07/21/2023
DRAWING No 23-129
SHEET 1 OF 18

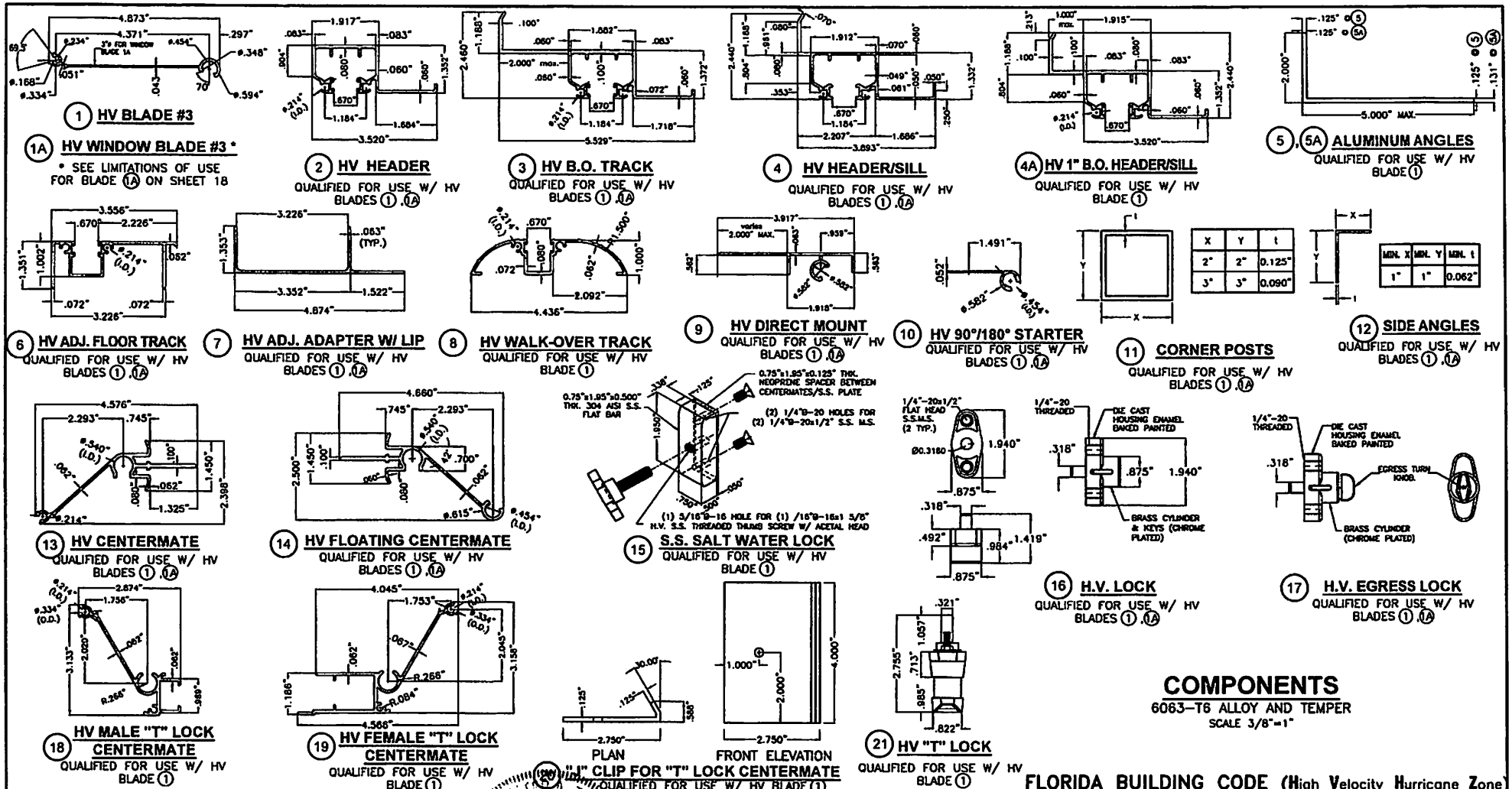

P.E. SEAL/SIGNATURE/DATE

© 2023 TILTECO, INC.

TILTECO INC.
TILLIT TESTING & ENGINEERING COMPANY
6355 N.W. 36th. St., Ste. 305, VIRGINIA GARDENS, FLORIDA 33166
Phone : (305)871-1530 . Fax : (305)871-1531
e-mail: tilteco@aol.com
CA-0006719
WALTER A. TILLIT Jr. P.E.
FLORIDA Lic. # 44167

A.S.S.A.
American Shutter Systems Association, Inc.
4268 Westroads Drive
West Palm Beach, FL 33407

© 2020 EASTERN METAL SUPPLY, INC.

BERTHA HV™
Accordion Shutter System
H.V. BLADE #3 W/ OR W/O H.V. WINDOW BLADE #3

REV. No	DESCRIPTION	DATE	DRAWN BY: Y.M.
1	OLD 20-150	07/21/23	DATE: 07/21/2023
2			DRAWING No
3			23-129
4			
5			SHEET
6			2 OF 18

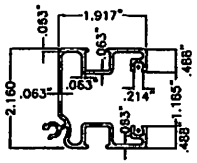

(22) **HD CENTERMATE W/ LOCKING ROD**

QUALIFIED FOR USE W/ HV BLADE (1)

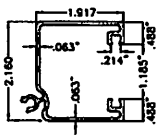

(23) **HD CENTERMATE W/ NO LOCKING ROD**

QUALIFIED FOR USE W/ HV BLADE (1)

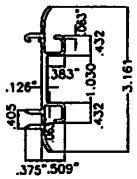

(24) **HD CENTERMATE'S INSERT**

QUALIFIED FOR USE W/ HV BLADE (1)

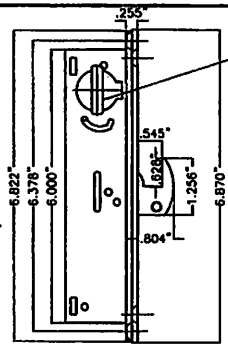

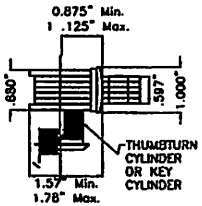

(25) **HD LOCK**

QUALIFIED FOR USE W/ HV BLADE (1)

BY REGENT HARDWARE MORTISE LOCKS SERIES 2333 HOOK BOLT LOCK.

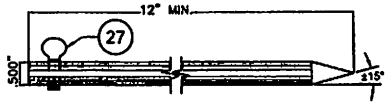

(26) **12" LOCKING ROD** △

QUALIFIED FOR USE W/ HV BLADE (1)

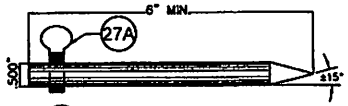

(26A) **6" LOCKING ROD** △

QUALIFIED FOR USE W/ HV BLADE (1)

△ (26), (26A) INSTALLATION WILL REQUIRE A 7/16" HOLE DRILLED AT TRACKS FOR PROPER EMBEDMENT

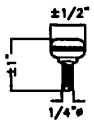

(27) **HV 1/4" Ø-20 AISI 304 SERIES S.S. THUMBSCREWS**

QUALIFIED FOR USE W/ HV BLADE (1)

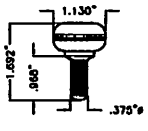

(27A) **HV 3/8" Ø-16 ACETAL THUMBSCREWS**

QUALIFIED FOR USE W/ HV BLADE (1)

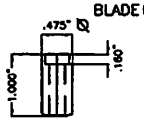

(28) **HV LONG RECESSED NYLON BUSHING**

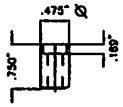

(29) **HV SHORT RECESSED NYLON BUSHING**

(30) **HV NYLON HAT WASHER**

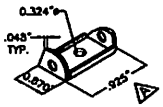

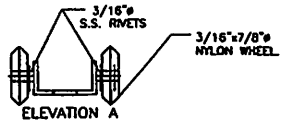

(31) **HV WHEEL CARRIAGE**

AISI 302-303 SERIES

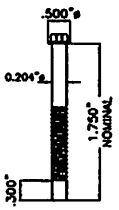

(32) **HV DIRECT MOUNT PIN**

#14-14x1 3/4" W/ #8 HD. W/ HV HD MARKING (SEE DETAIL X, SHEETS 13 & 16) W/ DACROSHIELD COATING

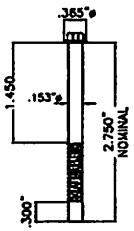

(33) **HV PIN @ BLADE**

#10-18"x2 3/4" W/ #8 HD. W/ HV HD MARKING W/ DACROSHIELD COATING

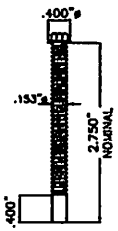

(34) **HV PIN @ (31)**

#10-18"x2 3/4" W/ #8 HD. W/ HV HD MARKING W/ DACROSHIELD COATING

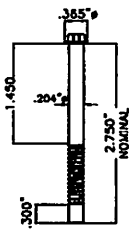

(35) **HV PIN @ MALE KNUCKLE @ (13), (18), (19), (22), (23).**

#14-14"x2 3/4" W/ #8 HD. W/ HV HD MARKING W/ DACROSHIELD COATING

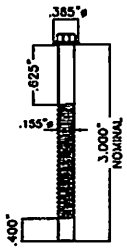

(36) **ALTERNATE PIN @ BLADE & @(31).**

#10-18"x3" W/ #8 HD. W/ "4" HD MARKING W/ DACROSHIELD COATING

COMPONENTS (CONTINUED)

N.T.S

FLORIDA BUILDING CODE (High Velocity Hurricane Zone)

WALTER A. TILLIT JR. LICENSE No. 44167 STATE OF FLORIDA PROFESSIONAL ENGINEER

P.E. SEAL/SIGNATURE/DATE

© 2023 TILTECO, INC.

TILTECO INC.
TILLIT TESTING & ENGINEERING COMPANY
6355 N.W. 36th. St., Ste. 305, VIRGINIA GARDENS, FLORIDA 33166
Phone : (305)871-1530 . Fax : (305)871-1531
e-mail: tilteco@aol.com
CA-0006719
WALTER A. TILLIT Jr. P.E.
FLORIDA Lic. # 44167

A.S.S.A.
American Shutter Systems Association, Inc.
4268 Westroads Drive
West Palm Beach, FL 33407

© 2020 EASTERN METAL SUPPLY, INC.

BERTHA HV™
Accordion Shutter System
H.V. BLADE #3 W/ OR W/O H.V. WINDOW BLADE #3

REV. No	DESCRIPTION	DATE	DRAWN BY: Y.M.
1	OLD 20-180	07/21/23	DATE: 07/21/2023
2			DRAWING No
3			23-129
4			
5			SHEET
6			3 OF 18

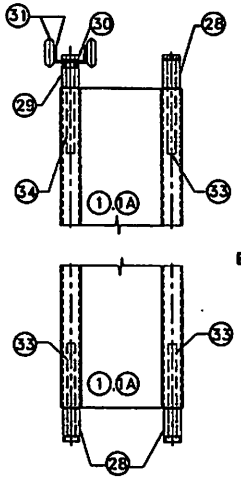

ASSEMBLY AT 31.
(31 GO EVERY OTHER INTERIOR KNUCKLE)

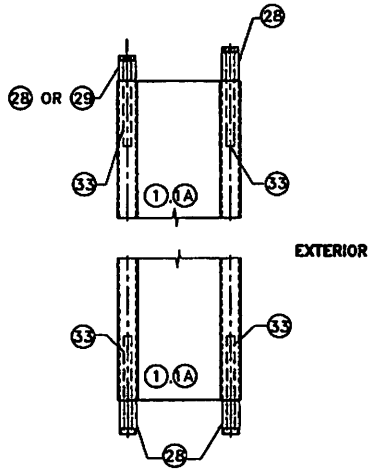

ASSEMBLY IN BETWEEN 31.

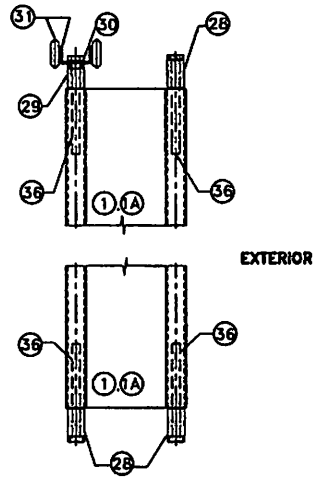

ASSEMBLY AT 31.
(31 GO EVERY OTHER INTERIOR KNUCKLE)

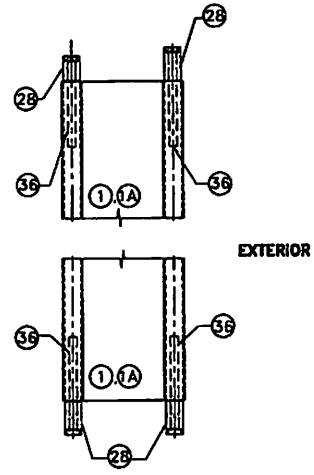

ASSEMBLY IN BETWEEN 31.

TYPICAL SHUTTER ASSEMBLY
WHEN $2\frac{3}{4}$" LONG NOMINAL PINS ARE USED *

SCALE: 1/4" = 1"

TYPICAL SHUTTER ASSEMBLY
WHEN 3" LONG NOMINAL PINS ARE USED

SCALE: 1/4" = 1"

*THE HV PINS & BUSHINGS ARE PRE-ASSEMBLED. TO KEEP BUSHINGS ON THE PIN A NOMINAL 0.275" O.D. x 0.130" I.D. x 0.072" THK. RUBBER RING IS PLACED OVER THE END OF THE SCREW, THE RING IS LEFT ON THE PIN WHEN INSTALLED INTO THE KNUCKLE'S SCREW BOSS.

FLORIDA BUILDING CODE (High Velocity Hurricane Zone)

WALTER A. TILLIT JR. No. 44167 STATE OF FLORIDA PROFESSIONAL ENGINEER
7/21/2023

P.E. SEAL/SIGNATURE/DATE

© 2023 TILTECO, INC.

TILTECO INC.
TILLIT TESTING & ENGINEERING COMPANY
6355 N.W. 36th. St., Ste. 305, VIRGINIA GARDENS, FLORIDA 33166
Phone : (305)871-1530 . Fax : (305)871-1531
e-mail: tilteco@aol.com
CA-0006719
WALTER A. TILLIT Jr. P.E.
FLORIDA Lic. # 44167

A.S.S.A.
American Shutter Systems Association, Inc.
4268 Westroads Drive
West Palm Beach, FL 33407

© 2020 EASTERN METAL SUPPLY, INC.

BERTHA HV™
Accordion Shutter System
H.V. BLADE #3 W/ OR W/O H.V. WINDOW BLADE #3

REV. No	DESCRIPTION	DATE	DRAWN BY: Y.M.
1	OLD 20-150	07/21/23	DATE: 07/21/2023
2			DRAWING No
3			23-129
4			
5			SHEET
6			3A OF 18

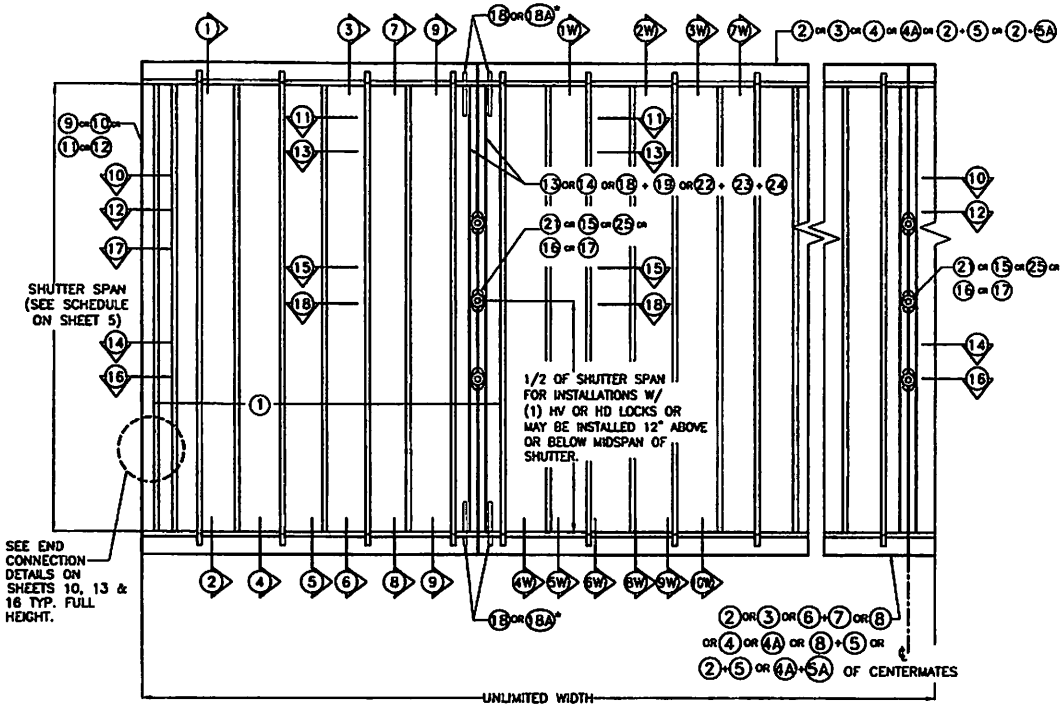

TYPICAL 1 H.V. BLADE #3 SHUTTER ELEVATION

N.T.S.

SEE LIMITATIONS OF USE FOR BLADE 1A ON SHEET 18.

NOTES ON HV, HV "T" AND HD LOCKS AND CENTERMATES: VALID ONLY FOR INSTALLATIONS W/ HV 1 BLADE

* APPLICATION W/ HV LOCKS AND CENTERMATES:

1. MANDATORY CONDITION #1: ONE HV LOCK 15 or 16 or 17 SHALL BE USED AT 1/2 OF SHUTTER SPAN FOR ANY SPAN OR 12" ABOVE OR BELOW 1/2 OF SHUTTER SPAN FOR SPANS UP TO 156", AND FOR INSTALLATIONS AT ANY ELEVATION EXCEPT FOR INSTALLATIONS INTO METAL STUDS. HV LOCK 15 or 16 or 17 MAY BE USED AS AN INSIDE OR OUTSIDE LOCK, ATTACHED TO 13 or 14 CENTERMATES W/ (2) 1/4"-20 x 1/2" LONG FLAT HEAD S.S. M.S. LOCATION OF LOCK SHALL BE AS INDICATED ON TYPICAL SHUTTER ELEVATION. USE OF LOCKING RODS 26 W/ 27 AND 27A IS COMPLETELY OPTIONAL.

2. MANDATORY CONDITION #2 FOR INSTALLATIONS INTO METAL STUDS: ONE HV LOCK 15 or 16 or 17 SHALL BE USED AT 1/2 OF SHUTTER SPAN FOR ANY SPAN OR 12" ABOVE OR BELOW 1/2 OF SHUTTER SPAN FOR SPANS UP TO 156", AND FOR INSTALLATIONS AT ANY ELEVATION EXCEPT FOR INSTALLATIONS INTO METAL STUD. HV LOCK 15 or 16 or 17 MAY BE USED AS AN INSIDE OR OUTSIDE LOCK, ATTACHED TO 13 or 14 CENTERMATES W/ (2) 1/4"-20 x 1/2" LONG FLAT HEAD S.S. M.S. LOCATION OF LOCK SHALL BE AS INDICATED ON TYPICAL SHUTTER ELEVATION. USE OF LOCKING RODS 26A W/ 27 OR 27A TOP AND BOTTOM IS COMPLETELY MANDATORY.

3. MANDATORY CONDITION #3 FOR KEYSTONE MOUNTING INSTALLATIONS: ONE HV LOCK 15 or 16 or 17 SHALL BE USED AT 1/2 OF SHUTTER SPAN FOR ANY SPAN OR 12" ABOVE OR BELOW 1/2 OF SHUTTER SPAN FOR SPANS UP TO 96", AND FOR INSTALLATIONS AT ANY ELEVATION. HV LOCK 15 or 16 or 17 MAY BE USED AS AN INSIDE OR OUTSIDE LOCK, ATTACHED TO 13 or 14 SYMMETRICAL CENTERMATES W/ (2) 1/4"-20 x 1/2" LONG FLAT HEAD S.S. M.S. LOCATION OF LOCK SHALL BE AS INDICATED ON TYPICAL SHUTTER ELEVATION. USE OF LOCKING RODS 26A W/ 27 OR 27A TOP AND BOTTOM IS COMPLETELY MANDATORY.

4. OPTIONAL CONDITION #1: IF DESIRED, FOR BETTER PERFORMANCE OR FOR SECURITY PURPOSES, UP TO TWO HV LOCKS 16, 17 OR 15 MAY BE USED AS AN INSIDE OR OUTSIDE LOCK. CONNECTION OF LOCKS TO CENTERMATES 13 OR 14 SHALL BE AS INDICATED ON NOTE (1) ABOVE.
LOCATION OF LOCKS SHALL BE AS INDICATED ON TYPICAL SHUTTER ELEVATION.

* APPLICATION W/ HV "T" LOCKS AND CENTERMATES:

1. SECOND ALTERNATE TO MANDATORY CONDITION #1 VALID ONLY FOR HV "T" LOCK 21, AND CENTERMATES 18 AND 19:
ONE ALTERNATE HV "T" LOCK 21 MAY BE INSTALLED IN LIEU OF OTHER LOCKS FOR ANY SPAN AND INSTALLATION AT ANY ELEVATION. ALTERNATE LOCK 21 MAY BE USED AS AN INSIDE OR OUTSIDE LOCK. ATTACHMENT OF LOCK 21 INCLUDES USING "J" CLIP 20, AS SHOWN ON SECTION 15, SHEET 12, WHICH MUST BE CONNECTED TO CENTERMATES 18 AND 19 W/ 1/4" ø-20x1" S.S.M.S. INTO A 1/4"ø x 5/8" RIVNUT. LOCK MAY BE INSTALLED AT MIDSPAN OR 12" MAXIMUM ABOVE AND BELOW MIDSPAN. USE OF TWO LOCKING RODS 26 or 26A TOP AND BOTTOM IS MANDATORY.

* APPLICATION W/ HD LOCKS & CENTERMATES:

1. THIRD ALTERNATE TO MANDATORY CONDITION # 1 VALID FOR HD LOCK 25 W/ (2) HD CENTERMATES 22 OR 23 OR 22 + 23 W/ 24:
ONE ALTERNATE HD LOCK 25 MAYBE USED IN LIEU OF OTHER LOCKS FOR ANY SPAN AND INSTALLATIONS AT ANY ELEVATION. ALTERNATE HD LOCK 25 MAY BE USED AS AN INSIDE OR OUTSIDE LOCK. ATTACHMENT OF HD LOCK 25 TO 24 IS W/ (3) #8 x 3/8" F.H. S.S.M.S., AND INCLUDES REINFORCEMENT INSERT 24 AS SHOWN ON SECTION 18, SHEET 12. LOCK MAY BE INSTALLED AT MIDSPAN OR 12" MAXIMUM BELOW OR ABOVE MIDSPAN. USE OF LOCKING RODS 26 or 26A IS COMPLETELY OPTIONAL.

FLORIDA BUILDING CODE (High Velocity Hurricane Zone)

WALTER A. TILLIT No. 44167 STATE OF FLORIDA PROFESSIONAL ENGINEER
7/26/2023
P.E. SEAL/SIGNATURE/DATE

© 2023 TILTECO, INC.

TILTECO INC.
TILLIT TESTING & ENGINEERING COMPANY
6355 N.W. 36th. St., Ste. 305, VIRGINIA GARDENS, FLORIDA 33166
Phone : (305)871-1530 . Fax : (305)871-1531
e-mail: tilteco@aol.com
CA-0006719
WALTER A. TILLIT Jr. P.E.
FLORIDA Lic. # 44167

A.S.S.A.
American Shutter Systems Association, Inc.
4268 Westroads Drive
West Palm Beach, FL 33407

© 2020 EASTERN METAL SUPPLY, INC.

BERTHA HV™
Accordion Shutter System
H.V. BLADE #3 W/ OR W/O H.V. WINDOW BLADE #3

REV. No	DESCRIPTION	DATE	DRAWN BY: Y.M.
1	OLD 20-160	07/21/23	DATE: 07/21/2023
2			DRAWING No
3			23-129
4			SHEET
5			4 OF 18
6			

MAXIMUM SHUTTER SPAN "L+" OR "L−"* (ft.) FOR INSTALLATIONS W/ ① HV BLADE. Δ

MAXIMUM A.S.D. PRESSURE RATING (psf) (+ or -)	POURED CONCRETE, CONCRETE BLOCK AND WOOD INSTALLATIONS ♣ †					
	WALL MOUNTING		FLOOR / CEILING MOUNTING		MIN. SEPARATION TO GLASS	
	L+ (FT)	L− (FT)	L+ (FT)	L− (FT)	KNUCKLE	LOCK/ CENTERMATE
35	12' - 7"	13' - 0"	12' - 7"	13' - 0"	4"	4 3/8"
40	11' - 10"	12' - 3"	11' - 10"	12' - 3"	4"	4 3/8"
45	11' - 9"	11' - 11"	11' - 9"	11' - 11"	4"	4 3/8"
50	11' - 5"	11' - 6"	11' - 5"	11' - 6"	4"	4 3/8"
55	11' - 4"	11' - 4"	11' - 4"	11' - 4"	4"	4 3/8"
60	10' - 6"	10' - 6"	10' - 6"	10' - 6"	4"	4 3/8"
65	8' - 8"	8' - 8"	8' - 8"	8' - 8"	4"	4 3/8"
70	8' - 3"	8' - 3"	8' - 3"	8' - 3"	3 1/8"	4 1/8"
75	7' - 9"	7' - 9"	7' - 9"	7' - 9"	3 1/8"	4 1/8"
80	7' - 3"	7' - 3"	7' - 3"	7' - 3"	3 1/8"	4 1/8"
85	6' - 10"	6' - 10"	6' - 10"	6' - 10"	3 1/8"	4 1/8"
90	5' - 7"	5' - 7"	5' - 7"	5' - 7"	3 1/8"	4 1/8"
95	5' - 6"	5' - 6"	5' - 6"	5' - 6"	3 1/8"	4 1/8"
100	5' - 5"	5' - 5"	5' - 5"	5' - 5"	3 1/8"	4 1/8"
105	5' - 3"	5' - 3"	5' - 3"	5' - 3"	3 1/8"	4 1/8"
110	5' - 2"	5' - 2"	5' - 2"	5' - 2"	3 1/8"	2 3/4"

† EXCEPT THAT MAXIMUM SHUTTER SPAN "L+" OR "L−" AND MAXIMUM A.S.D. DESIGN PRESSURE RATING FOR INSTALLATIONS INTO CONCRETE OR CONCRETE BLOCK SHALL BE LIMITED AS FOLLOWS:
1- CONNECTIONS TO KEYSTONE MOUNTING LIMITED TO +64,-72 p.s.f. AND 7'-6" SPAN, SEE SECTION 9 ON SHEET 10.

♣ EXCEPT THAT MAXIMUM SHUTTER SPAN "L+" OR "L−" AND MAXIMUM A.S.D. DESIGN PRESSURE RATING FOR INSTALLATIONS INTO WOOD SHALL BE LIMITED AS FOLLOWS:
1- CONNECTIONS TO PLYWOOD LIMITED TO ±62 p.s.f. AND 8'-11" SPAN, SEE SECTION 5W ON SHEET 14.
2- CONNECTIONS TO HOLLOW CEILING LIMITED TO ±62 p.s.f. AND 8'-0" SPAN, SEE SECTION 2W ON SHEET 14.

MAXIMUM SHUTTER SPAN "L+" OR "L−"* (ft.) FOR INSTALLATIONS W/ ① HV BLADE. Δ

MAXIMUM A.S.D. PRESSURE RATING (psf) (+ or -)	FOR METAL STUD INSTALLATIONS ■					
	WALL MOUNTING		FLOOR / CEILING MOUNTING		MIN. SEPARATION TO GLASS	
	L+ (FT)	L− (FT)	L+ (FT)	L− (FT)	KNUCKLE	LOCK/ CENTERMATE
64	7' - 0"	7' - 0"	-	-	2 3/4"	4 1/8"
72	6' - 7"	6' - 7"	-	-	2 3/4"	4 1/8"

■ SEE SECTION ⑩ ON SHEET 10A.

MAXIMUM SHUTTER SPAN "L+" OR "L−"* (ft.) FOR INSTALLATIONS W/ ① & ⑩A◆ HV BLADES. Δ

MAXIMUM A.S.D. PRESSURE RATING (psf) (+ or -)	POURED CONCRETE, CONCRETE BLOCK AND WOOD INSTALLATIONS					
	WALL MOUNTING		FLOOR / CEILING MOUNTING		MIN. SEPARATION TO GLASS	
	L+ (FT)	L− (FT)	L+ (FT)	L− (FT)	KNUCKLE	LOCK/ CENTERMATE
55	9' - 6"	9' - 6"	9' - 6"	9' - 6"	3 1/2"	3 3/8"
62	8' - 11"	8' - 11"	8' - 11"	8' - 11"	3 1/2"	3 3/8"

◆ SEE LIMITATIONS OF USE FOR BLADE ⑩A ON SHEET 18.

* NOTES:

(1) L+: MAXIMUM ALLOWABLE SPAN FOR A GIVEN POSITIVE A.S.D. DESIGN PRESSURE RATING.
L−: MAXIMUM ALLOWABLE SPAN FOR A GIVEN NEGATIVE A.S.D. DESIGN PRESSURE RATING

(2) PROCEDURE TO DETERMINE MAXIMUM SPAN FOR WALL MOUNTINGS (TOP/BOTTOM) OR FLOOR/CEILING:

GIVEN A A.S.D. DESIGN PRESSURE RATING, DETERMINE MAXIMUM SPAN "L+" FROM SCHEDULES.
GIVEN A NEGATIVE A.S.D. DESIGN PRESSURE RATING, DETERMINE MAXIMUM SPAN "L−" FROM SCHEDULES.

FINAL MAXIMUM ALLOWABLE SPAN IS EQUAL TO THE MINIMUM DETERMINED SPAN BETWEEN "L+" AND "L−".

(3) PROCEDURE TO DETERMINE MAXIMUM SPAN FOR COMBINATIONS IN BETWEEN WALL MOUNTINGS W/ FLOOR/CEILING MOUNTINGS:

FOR A GIVEN POSITIVE A.S.D. DESIGN PRESSURE RATING:
DETERMINE:
L_{1+}= MAX. SPAN FOR WALL MOUNTING INSTALLATIONS.
L_{2+}= MAX. SPAN FOR FLOOR/CEILING MOUNTING INSTALLATIONS.

FOR A GIVEN NEGATIVE A.S.D. DESIGN PRESSURE RATING:
DETERMINE:
L_{1-}= MAX. SPAN FOR WALL MOUNTING INSTALLATIONS.
L_{2-}= MAX. SPAN FOR FLOOR/CEILING MOUNTING INSTALLATIONS.

FINAL MAXIMUM ALLOWABLE SPAN IS EQUAL TO THE MINIMUM BETWEEN "L_{1+}", "L_{2+}", "L_{1-}" AND "L_{2-}"

(4) GO TO ANCHOR SCHEDULE ON SHEETS 6 & 7 FOR CONCRETE AND BLOCK, SHEET 8 FOR WOOD AND TO SECTION ON SHEET 10 FOR KEYSTONE MOUNTINGS AND SHEET 10A FOR METAL STUDS WITH FINAL MAXIMUM ALLOWABLE SPAN AND NEGATIVE A.S.D. DESIGN PRESSURE RATING TO DETERMINE MAXIMUM ANCHOR SPACING.

(5) MINIMUM SEPARATION TO GLASS SHALL BE THE GREATEST MEASURED FROM EITHER REAR OF KNUCKLES OR REAR OF LOCKS/CENTERMATES (AS APPLICABLE) TO GLASS.

Δ INSTALLATION LEGEND APPLICABLE FOR ① HV AND ⑩A HV BLADES

SUBSTRATES / MOUNTINGS	CONCRETE & MASONRY	METAL STUD	WOOD
WALL	1, 2, 3, 4, 5 & 9	10	1W, 3W, 4W 7W, 9W & 10W
FLOOR/CEILING	6, 7 & 8	---	2W, 3W, 6W & 8W

FLORIDA BUILDING CODE (High Velocity Hurricane Zone)

WALTER A. TILLIT JR. LICENSE No 44167 STATE OF FLORIDA PROFESSIONAL ENGINEER
7/21/2023
P.E. SEAL/SIGNATURE/DATE

© 2023 TILTECO, INC.

TILTECO INC.
TILLIT TESTING & ENGINEERING COMPANY
6355 N.W. 36th. St., Ste. 305, VIRGINIA GARDENS, FLORIDA 33166
Phone : (305)871-1530 . Fax : (305)871-1531
e-mail: tilteco@aol.com
CA-0006719
WALTER A. TILLIT Jr. P.E.
FLORIDA Lic. # 44167

A.S.S.A.
American Shutter Systems Association, Inc.
4268 Westroads Drive
West Palm Beach, FL 33407

© 2020 EASTERN METAL SUPPLY, INC.

BERTHA HV™
Accordion Shutter System
H.V. BLADE #3 W/ OR W/O H.V. WINDOW BLADE #3

REV. No	DESCRIPTION	DATE	DRAWN BY: Y.M.
1	OLD 20-160	07/21/23	DATE: 07/21/2023
2			DRAWING No 23-129
3			
4			
5			SHEET 5 OF 18
6			

MAXIMUM ANCHOR * SPACING (in.) SCHEDULE FOR A GIVEN MAX. SHUTTER SPAN, A.S.D DESIGN NEGATIVE PRESSURE RATING AND A CORRESPONDING MOUNTING TYPE FOR CONCRETE INSTALLATIONS

(SEE MOUNTINGS 1, 2, 3, 4 & 5 ON SHEET 9)

MAXIMUM SPAN (ft)	POURED CONCRETE																										
	① & ② WALL MOUNTINGS W/ ③, ④ OR ④A									③ & ④ WALL MOUNTING W/ ② + ⑤									⑤ WALL SILL MOUNTING W/ Ⓑ + ⑤								
	A.S.D. DESIGN NEGATIVE LOAD (psf)									A.S.D. DESIGN NEGATIVE LOAD (psf)									A.S.D. DESIGN NEGATIVE LOAD (psf)								
	30	40	50	60	70	80	90	100	110	30	40	50	60	70	80	90	100	110	30	40	50	60	70	80	90	100	110
3'-0" OR LESS	9	9	9	9	9	9	9	9	9	9	9	9	9	9	9	9	9	9	9	9	9	9	9	9	9	9	9
	–	–	–	–	–	–	–	–	–	–	–	–	–	–	–	–	–	–	–	–	–	–	–	–	–	–	–
	9	9	9	9	9	9	9	9	9	9	9	9	9	9	9	9	9	9	9	9	9	9	9	9	9	9	9
	9	9	9	9	9	9	9	9	9	9	9	9	9	9	9	9	9	9	9	9	9	9	9	9	9	9	9
4'-0"	9	9	9	9	9	9	9	9	9	9	9	9	9	9	9	9	9	9	9	9	9	9	9	9	9	9	9
	–	–	–	–	–	–	–	–	–	–	–	–	–	–	–	–	–	–	–	–	–	–	–	–	–	–	–
	9	9	9	9	9	9	9	8	6	9	9	9	9	9	9	9	9	9	9	9	9	9	9	9	9	9	9
	9	9	9	9	9	9	9	9	9	9	9	9	9	9	9	9	9	9	9	9	9	9	9	9	9	9	9
5'-0"	9	9	9	9	9	9	9	7.5	6	9	9	9	9	9	9	9	9	9	9	9	9	9	9	9	9	9	9
	–	–	–	–	–	–	–	–	–	–	–	–	–	–	–	–	–	–	–	–	–	–	–	–	–	–	–
	9	9	9	9	9	8	5.5	4.5	3.5	9	9	9	9	9	9	9	9	9	9	9	9	9	9	9	9	9	9
	9	9	9	9	9	9	8.5	7	5.5	9	9	9	9	9	9	9	9	9	9	9	9	9	9	9	9	9	9
6'-0"	9	9	9	9	9	8.5	6.5	5	–	9	9	9	9	9	9	9	9	–	9	9	9	9	9	9	9	9	–
	–	–	–	–	–	–	–	–	–	–	–	–	–	–	–	–	–	–	–	–	–	–	–	–	–	–	–
	9	9	9	9	6.5	4.5	4	3	–	9	9	9	9	9	9	9	9	–	9	9	9	9	9	9	9	9	–
	9	9	9	9	9	7.5	5.5	4.5	–	9	9	9	9	9	9	9	9	–	9	9	9	9	9	9	9	9	–
7'-0"	9	9	9	9	8	6	4.5	–	–	9	9	9	9	9	9	9	–	–	9	9	9	9	9	9	9	–	–
	–	–	–	–	–	–	–	–	–	–	–	–	–	–	–	–	–	–	–	–	–	–	–	–	–	–	–
	9	9	9	6.5	4.5	3.5	3.5	–	–	9	9	9	9	9	9	9	–	–	9	9	9	9	9	9	9	–	–
	9	9	9	9	7	5.5	4	–	–	9	9	9	9	9	9	9	–	–	9	9	9	9	9	9	9	–	–
8'-0"	9	9	9	8.5	6	4.5	–	–	–	9	9	9	9	9	9	–	–	–	9	9	9	9	9	9	–	–	–
	–	–	–	–	–	–	–	–	–	–	–	–	–	–	–	–	–	–	–	–	–	–	–	–	–	–	–
	9	9	8	4.5	3.5	–	–	–	–	9	9	9	9	9	9	–	–	–	9	9	9	9	9	9	–	–	–
	9	9	9	7.5	5.5	4	–	–	–	9	9	9	9	9	9	–	–	–	9	9	9	9	9	9	–	–	–
9'-0"	9	9	9	6.5	4.5	–	–	–	–	9	9	9	9	9	–	–	–	–	9	9	9	9	9	–	–	–	–
	–	–	–	–	–	–	–	–	–	–	–	–	–	–	–	–	–	–	–	–	–	–	–	–	–	–	–
	9	9	5.5	3.5	–	–	–	–	–	9	9	9	9	9	–	–	–	–	9	9	9	9	9	–	–	–	–
	9	9	8.5	5.5	4	–	–	–	–	9	9	9	9	9	–	–	–	–	9	9	9	9	9	–	–	–	–
10'-0"	9	9	7.5	5	4	–	–	–	–	9	9	9	9	9	–	–	–	–	9	9	9	9	9	–	–	–	–
	–	–	–	–	–	–	–	–	–	–	–	–	–	–	–	–	–	–	–	–	–	–	–	–	–	–	–
	9	8	4.5	3	–	–	–	–	–	9	9	9	9	9	–	–	–	–	9	9	9	9	9	–	–	–	–
	9	9	7	4.5	–	–	–	–	–	9	9	9	9	9	–	–	–	–	9	9	9	9	9	–	–	–	–
11'-0"	9	9	6	4.5	3.5	–	–	–	–	9	9	9	9	9	–	–	–	–	9	9	9	9	9	–	–	–	–
	–	–	–	–	–	–	–	–	–	–	–	–	–	–	–	–	–	–	–	–	–	–	–	–	–	–	–
	9	6	3.5	–	–	–	–	–	–	9	9	9	9	9	–	–	–	–	9	9	9	9	9	–	–	–	–
	9	9	5.5	4	–	–	–	–	–	9	9	9	9	9	–	–	–	–	9	9	9	9	9	–	–	–	–
12'-0"	9	8.5	5	3.5	–	–	–	–	–	9	9	9	9	–	–	–	–	–	9	9	9	9	–	–	–	–	–
	–	–	–	–	–	–	–	–	–	–	–	–	–	–	–	–	–	–	–	–	–	–	–	–	–	–	–
	9	4.5	3	–	–	–	–	–	–	9	9	9	9	–	–	–	–	–	9	9	9	9	–	–	–	–	–
	9	7.5	4.5	–	–	–	–	–	–	9	9	9	9	–	–	–	–	–	9	9	9	9	–	–	–	–	–
13'-0"	9	7	–	–	–	–	–	–	–	9	9	–	–	–	–	–	–	–	9	9	–	–	–	–	–	–	–
	–	–	–	–	–	–	–	–	–	–	–	–	–	–	–	–	–	–	–	–	–	–	–	–	–	–	–
	8.5	4	–	–	–	–	–	–	–	9	9	–	–	–	–	–	–	–	9	9	–	–	–	–	–	–	–
	9	6	–	–	–	–	–	–	–	9	9	–	–	–	–	–	–	–	9	9	–	–	–	–	–	–	–

*SPECIFICATIONS ON ANCHOR REQUIREMENTS: POURED CONCRETE OR CONCRETE BLOCK SUBSTRATES

1. ANCHORS TO WALL SHALL BE AS FOLLOWS:

(A) TO EXISTING POURED CONCRETE:
- 1/4"ø TAPCON W/ ADVANCED THREADFORM TECHNOLOGY, AS MANUFACTURED BY I.T.W. BUILDEX. (Min. f'c = 3 ksi).
- 1/4"ø x 3/4" ALL POINTS SOLID-SET ANCHORS AS DISTRIBUTED BY ALL POINTS SCREW, BOLT & SPECIALTY COMPANY. (Min. f'c = 3 ksi).
- 1/4"ø BLUE TAP CONCRETE ANCHORS WITH CAP, AS MANUFACTURED BY FLORIDA FASTENERS DIRECT, INC. (Min. f'c = 2 ksi).
- 1/4"ø TAPPER+ ANCHORS AS MANUFACTURED BY DEWALT, INC. (Min. f'c = 3 ksi), AND DISTRIBUTED BY ALL POINTS SCREW, BOLT & SPECIALTY COMPANY OR ANY OTHER APPROVED LICENSED OR AUTHORIZED VENDOR REGISTERED W/ THE AMERICAN SHUTTER SYSTEMS ASSOCIATION, INC.

NOTES:

A.1) MINIMUM EMBEDMENT INTO POURED CONCRETE OF TAPCON W/ ADVANCED THREADFORM TECHNOLOGY AND TAPPER+ ANCHORS IS 1 3/4", AND 1 1/2" FOR BLUE TAP WITH CAP ANCHORS.

A.2) MINIMUM EMBEDMENT OF 1/4"ø x 3/4" ALL POINTS SOLID-SET ANCHORS SHALL BE 7/8" INTO THE POURED CONCRETE. NO EMBEDMENT INTO STUCCO SHALL BE PERMITTED. 1/4" ø-20 S.S. MACHINE SCREW USED SHALL BE 1 1/2" LONG MINIMUM SHOULD STUCCO EXIST, AND 1" MINIMUM FOR WALLS WITH NO STUCCO.

A.3) IN CASE THAT PRECAST STONE, PRECAST CONCRETE PANELS, PAVERS OR ANY VENEER BE FOUND ON THE EXISTING WALL OR FLOOR, ANCHORS SHALL BE LONG ENOUGH TO REACH THE MAIN STRUCTURE BEHIND SAID WALL FINISHES. ANCHORAGE SHALL BE AS INDICATED ON NOTES A.1) & A.2) ABOVE. FOR INSTALLATIONS ON VINYL SIDING WITH OR WITHOUT METAL STUDS OR EIFS WITH WOOD STUDS CONSULT THIS ENGINEER. FOR INSTALLATIONS INTO EIFS WITH METAL STUDS SEE SHEET 10.

(B) TO EXISTING ASTM C-90 CONCRETE BLOCK WALL:
- 1/4"ø TAPCON W/ ADVANCED THREADFORM TECHNOLOGY ANCHORS, AS MANUFACTURED BY I.T.W. BUILDEX.
- 1/4"ø x 3/4" ALL POINTS SOLID-SET ANCHORS AS DISTRIBUTED BY ALL POINTS SCREW, BOLT & SPECIALTY COMPANY.
- 1/4"ø BLUE TAP CONCRETE ANCHORS WITH CAP, AS MANUFACTURED BY FLORIDA FASTENERS DIRECT, INC.
- 1/4"ø TAPPER+ ANCHORS AS MANUFACTURED BY DEWALT, INC., AND DISTRIBUTED BY ALL POINTS SCREW, BOLT & SPECIALTY COMPANY OR ANY OTHER APPROVED LICENSED OR AUTHORIZED VENDOR REGISTERED W/ THE AMERICAN SHUTTER SYSTEMS ASSOCIATION, INC.

NOTES:

B.1) MINIMUM EMBEDMENT INTO CONCRETE BLOCK OF TAPCON W/ ADVANCED THREADFORM TECHNOLOGY ANCHOR IS 1, AND 1 1/4" FOR TAPPER+ AND BLUE TAP WITH CAP ANCHORS.

B.2) MINIMUM EMBEDMENT OF 1/4"ø x 3/4" ALL POINTS SOLID-SET ANCHORS SHALL BE ENTIRELY EMBEDDED INTO THE CONCRETE BLOCK. NO EMBEDMENT INTO STUCCO SHALL BE PERMITTED. 1/4" ø-20 S.S. MACHINE SCREW USED SHALL BE 1 1/2" LONG MINIMUM SHOULD STUCCO EXIST, AND 1" MINIMUM FOR WALLS WITH NO STUCCO.

B.3) IN CASE THAT PRECAST STONE, PRECAST CONCRETE PANELS, PAVERS OR ANY VENEER BE FOUND ON THE EXISTING WALL OR FLOOR, ANCHORS SHALL BE LONG ENOUGH TO REACH THE MAIN STRUCTURE BEHIND SAID WALL FINISHES. ANCHORAGE SHALL BE AS INDICATED ON NOTES B.1) & B.2) ABOVE. FOR INSTALLATIONS ON VINYL SIDING WITH OR WITHOUT METAL STUDS OR EIFS WITH WOOD STUDS CONSULT THIS ENGINEER. FOR INSTALLATIONS INTO EIFS WITH METAL STUDS SEE SHEET 10.

(C) ANCHORS SHALL BE INSTALLED FOLLOWING ALL OF THE RECOMMENDATIONS AND SPECIFICATIONS OF THE ANCHOR'S MANUFACTURER.

(D) SEE SCHEDULE BELOW FOR EDGE DISTANCE (E.D.) VERSUS SPACING RELATIONSHIP FOR ANCHORS.

ANCHORS SPACING LEGEND

TAPCON W/ ADVANCED THREADFORM TECHNOLOGY
ALL POINTS SOLID-SET
BLUE TAP WITH CAP
TAPPER +

EDGE DISTANCE VERSUS SPACING SCHEDULE FOR ANCHORS:

MAXIMUM ANCHOR SPACINGS ARE VALID FOR EDGE DISTANCES INDICATED BELOW. FOR E. D. LESS THAN THE INDICATED, REDUCE ANCHOR SPACING BY MULTIPLYING SPACING SHOWN ON SCHEDULE BY THE FOLLOWING FACTORS. REDUCED SPACING OBTAINED USING FACTOR SHALL NOT BE LESS THAN MINIMUM SPACING INDICATED FOR EACH ANCHOR TYPE.

ACTUAL EDGE DISTANCE E.D.	FACTOR					
	TAPCON WITH ADVANCED THREADFORM TECH. MIN. SPACING		ALL POINTS SOLID SET	BLUE TAP WITH CAP	TAPPER + MIN. SPACING	
	3"	4"	MIN. SPACING = 3 1/2"	MIN. SPACING = 3"	3 3/4"	4"
	POURED CONCRETE MIN. E.D. = 3 1/2"	CONCRETE BLOCK MIN. E.D. = 2 1/2"	POURED CONCRETE & CONCRETE BLOCK MIN. E.D. = 3 1/2"	POURED CONCRETE & CONCRETE BLOCK MIN. E.D. = 3"	POURED CONCRETE MIN. E.D. = 3 1/2"	CONCRETE BLOCK MIN. E.D. = 2 1/2"
3"	0.90	1.0	0.78	1.0	0.84	1.0
2 1/2"	0.81	1.0	–	–	0.67	1.0
2"	0.71	–	–	–	0.51	–
1 3/4"	0.91	–	–	–	0.43	–
1 1/2"	–	–	–	–	0.35	–

① HV BLADE #3 OR ① HV BLADE #3 W/ ①A HV WINDOW BLADE WORKING IN UNISON◆

◆ SEE LIMITATIONS OF USE FOR BLADE ①A ON SHEET 18.

FLORIDA BUILDING CODE (High Velocity Hurricane Zone)

LICENSE No. 44167 STATE OF FLORIDA PROFESSIONAL ENGINEER
7/24/2023

P.E. SEAL/SIGNATURE/DATE

© 2023 TILTECO, INC.

TILTECO INC.
TILLIT TESTING & ENGINEERING COMPANY
6355 N.W. 36th. St., Ste. 305, VIRGINIA GARDENS, FLORIDA 33166
Phone : (305)871-1530 . Fax : (305)871-1531
e-mail: tilteco@aol.com
CA-0006719
WALTER A. TILLIT Jr. P.E.
FLORIDA Lic. # 44167

A.S.S.A.
American Shutter Systems Association, Inc.
4268 Westroads Drive
West Palm Beach, FL 33407

© 2020 EASTERN METAL SUPPLY, INC.

BERTHA HV™
Accordion Shutter System
H.V. BLADE #3 W/ OR W/O H.V. WINDOW BLADE #3

REV. No	DESCRIPTION	DATE	DRAWN BY: Y.M.
1	OLD 20-150	07/21/23	DATE: 07/21/2023
2			DRAWING No
3			23-129
4			
5			SHEET
6			6 OF 18

ANCHORS SPACING LEGEND

TAPCON W/ ADVANCED THREADFORM TECHNOLOGY
ALL POINTS SOLID-SET
BLUE TAP WITH CAP
TAPPER +

① HV BLADE #3 OR ① HV BLADE #3 W/ ⑴A HV WINDOW BLADE WORKING IN UNISON ◆

MAXIMUM ANCHOR * SPACING (in.) SCHEDULE FOR A GIVEN MAX. SHUTTER SPAN, A.S.D. DESIGN NEGATIVE PRESSURE RATING AND A CORRESPONDING MOUNTING TYPE FOR CONCRETE OR CONCRETE BLOCK INSTALLATIONS

(SEE MOUNTINGS 1 THRU 8, SEE SHEETS 9 & 10)

* SEE ANCHOR SPECIFICATIONS ON SHEET 6

◆ SEE LIMITATIONS OF USE FOR BLADE ⑴A ON SHEET 18.

MAXIMUM SPAN (ft)	CONCRETE BLOCK																																POURED CONCRETE																			
	① & ② WALL MOUNTINGS W/ ③ OR ⑷A								① & ② WALL MOUNTINGS W/ ④.								③ & ④ WALL MOUNTING W/ ② + ⑤								⑤ WALL SILL MOUNTING W/ ⑧ + ⑤								⑥ FLOOR MOUNTING W/ ⑧								⑦ CEILING MOUNTING W/ ②								⑧ FLOOR MOUNTING W/ ⑥ + ⑦							
	A.S.D. DESIGN NEGATIVE LOAD (psf)								A.S.D. DESIGN NEGATIVE LOAD (psf)								A.S.D. DESIGN NEGATIVE LOAD (psf)								A.S.D. DESIGN NEGATIVE LOAD (psf)								A.S.D. DESIGN NEGATIVE LOAD (psf)								A.S.D. DESIGN NEGATIVE LOAD (psf)								A.S.D. DESIGN NEGATIVE LOAD (psf)							
	30	40	50	60	70	80	90	110	30	40	50	60	70	80	90	110	30	40	50	60	70	80	90	110	30	40	50	60	70	80	90	110	30	40	50	60	70	80	90	110	30	40	50	60	70	80	90	110	30	40	50	60	70	80	90	110
3'-0" OR LESS	9	9	9	9	9	9	9	6	9	9	9	9	9	9	9	8	9	9	9	9	9	9	9	8.5	9	9	9	9	9	9	9	8.5	9	9	9	9	9	9	9	9	9	9	9	9	9	9	9	9	9	9	9	9	9	9	9	9
	—	—	—	—	—	—	—	—	—	—	—	—	—	—	—	—	—	—	—	—	—	—	—	—	—	—	—	—	—	—	—	—	9	9	9	9	9	9	9	9	—	—	—	—	—	—	—	—	9	9	9	9	9	9	9	9
	9	9	9	9	9	9	9	9	9	9	9	9	9	9	9	9	9	9	9	9	9	9	9	9	9	9	9	9	9	9	9	9	9	9	9	9	9	9	9	9	9	9	9	9	9	9	9	9	9	9	9	9	9	9	9	9
	9	9	9	9	9	9	9	9	9	9	9	9	9	9	9	9	9	9	9	9	9	9	9	9	9	9	9	9	9	9	9	9	9	9	9	9	9	9	9	9	9	9	9	9	8	9	9	9	9	9	9	9	9	9	9	9
4'-0"	9	9	9	9	9	8	4	—	9	9	9	9	9	9	5	—	9	9	9	9	9	8.5	7.5	6	9	9	9	9	9	8.5	7.5	6	9	9	9	9	9	9	9	9	9	9	9	9	9	9	9	9	9	9	9	9	9	9	9
	—	—	—	—	—	—	—	—	—	—	—	—	—	—	—	—	—	—	—	—	—	—	—	—	—	—	—	—	—	—	—	—	9	9	9	9	9	9	9	9	—	—	—	—	—	—	—	—	9	9	9	9	9	9	9	9
	9	9	9	9	9	9	5.5	3	9	9	9	9	9	9	6.5	3	9	9	9	9	9	9	9	8.5	9	9	9	9	9	9	9	8.5	9	9	9	9	9	9	9	9	9	9	9	9	9	9	9	9	9	9	9	9	9	9	8.5
	9	9	9	9	9	9	9	9	9	9	9	9	9	9	7	—	9	9	9	9	9	9	9	9	9	9	9	9	9	9	9	9	9	9	9	9	9	9	9	9	9	9	9	9	9	9	9	9	9	9	9	9	9	9	9	8.5
5'-0"	9	9	9	9	4.5	—	—	—	9	9	9	9	6	3.5	—	—	9	9	9	9	8	7	6	5	9	9	9	9	8	7	6	5	9	9	9	9	9	9	9	9	9	9	9	9	9	9	9	9	9	9	9	9	9	9	9	7.5
	—	—	—	—	—	—	—	—	—	—	—	—	—	—	—	—	—	—	—	—	—	—	—	—	—	—	—	—	—	—	—	—	9	9	9	9	9	9	9	9	—	—	—	—	—	—	—	—	9	9	9	9	9	9	9	8.5
	9	9	9	9	6.5	4	—	—	9	9	9	9	7	4	3	—	9	9	9	9	9	9	8	6.5	9	9	9	9	9	9	8	6.5	9	9	9	9	9	9	9	9	9	9	9	9	9	9	8.5	7	9	9	9	9	8.5	7.5	6.5	5.5
	9	9	9	9	9	9	9	4	9	9	9	9	8	4.5	—	—	9	9	9	9	9	9	9	6	9	9	9	9	9	9	9	8	9	9	9	9	9	9	9	9	9	9	9	9	9	9	9	8.5	9	9	9	9	9	9	8.5	7
6'-0"	9	9	9	4	—	—	—	—	9	9	9	5	3	—	—	—	9	9	9	9	6.5	5.5	5	—	9	9	9	7.5	6.5	5.5	5	—	9	9	9	9	9	9	9	—	9	9	9	9	9	9	9	—	9	9	9	9	9	8.5	7.5	—
	—	—	—	—	—	—	—	—	—	—	—	—	—	—	—	—	—	—	—	—	—	—	—	—	—	—	—	—	—	—	—	—	9	9	9	9	9	9	9	—	—	—	—	—	—	—	—	9	9	9	9	9	9	8.5	—
	9	9	9	5.5	3	—	—	—	9	9	9	6.5	3.5	—	—	—	9	9	9	9	9	7.5	7	—	9	9	9	9	9	7.5	7	—	9	9	9	9	9	9	9	—	9	9	9	9	9	8	7	—	9	9	9	9	8.5	7	6	5.5	—
	9	9	9	9	9	8	4	—	9	9	9	7	4.5	—	—	—	9	9	9	9	9	9	8	—	9	9	9	9	9	9	8	—	9	9	9	9	9	9	8.5	—	9	9	9	9	9	9	8	—	9	9	9	9	9	8	7	—
7'-0"	9	9	4.5	—	—	—	—	—	9	9	6	3	—	—	—	—	9	9	9	8	5.5	5	4.5	—	9	9	8	6.5	5.5	5	4.5	—	9	9	9	9	9	9	9	—	9	9	9	9	9	9	8	—	9	9	9	9	8.5	7.5	6.5	—
	—	—	—	—	—	—	—	—	—	—	—	—	—	—	—	—	—	—	—	—	—	—	—	—	—	—	—	—	—	—	—	—	9	9	9	9	9	9	9	—	—	—	—	—	—	—	—	9	9	9	9	8.5	7.5	—	—
	9	9	6.5	3	—	—	—	—	9	9	7	3.5	—	—	—	—	9	9	9	9	7.5	6.5	6	—	9	9	9	9	7.5	6.5	6	—	9	9	9	9	9	9	9	—	9	9	8.5	7	6	7	6	—	9	9	8.5	7	6	5.5	4.5	—
	9	9	9	9	7	—	—	—	9	9	7.5	4	—	—	—	—	9	9	9	9	9	8	7	—	9	9	9	9	9	8	7	—	9	9	9	9	9	9	9	—	9	9	9	9	9	8	7.5	—	9	9	9	9	7.5	6.5	6	—
8'-0"	9	8	—	—	—	—	—	—	9	9	3.5	—	—	—	—	—	9	9	8.5	7	5	4	—	—	9	8.5	7	5.5	5	4	—	—	9	9	9	9	9	9	—	—	9	9	9	9	9	8	—	—	9	9	9	8.5	7.5	6.5	—	—
	—	—	—	—	—	—	—	—	—	—	—	—	—	—	—	—	—	—	—	—	—	—	—	—	—	—	—	—	—	—	—	—	9	9	9	9	9	9	—	—	—	—	—	—	—	—	—	9	9	9	9	8	7.5	—	—
	9	9	4	—	—	—	—	—	9	6.5	4	—	—	—	—	—	9	9	9	7.5	6.5	5.5	—	—	9	9	9	7.5	6.5	5.5	—	—	9	9	9	9	9	9	—	—	9	9	9	9	8	7	6	—	9	9	7.5	6	5.5	4.5	—	—
	9	9	9	8	—	—	—	—	9	9	4.5	—	—	—	—	—	9	9	9	9	8	7	—	—	9	9	9	9	8	7	—	—	9	9	9	9	9	9	—	—	9	9	9	9	8	7	—	—	9	9	9	8	6.5	6	—	—
9'-0"	9	4	—	—	—	—	—	—	9	5	—	—	—	—	—	—	9	9	7.5	6.5	4.5	—	—	—	9	7.5	6	5	4.5	—	—	—	9	9	9	9	9	—	—	—	9	9	9	9	8	—	—	—	9	9	9	7.5	6.5	—	—	—
	—	—	—	—	—	—	—	—	—	—	—	—	—	—	—	—	—	—	—	—	—	—	—	—	—	—	—	—	—	—	—	—	9	9	9	9	9	—	—	—	—	—	—	—	—	—	—	9	9	9	8.5	7.5	—	—	—
	9	5.5	—	—	—	—	—	—	9	4	3	—	—	—	—	—	9	9	8	7	6	—	—	—	9	9	8	7	6	—	—	—	9	9	9	9	9	—	—	—	9	9	9	7	6	—	—	—	9	8.5	6.5	5.5	4.5	—	—	—
	9	9	9	4	—	—	—	—	9	7	—	—	—	—	—	—	9	9	9	8	7	—	—	—	9	9	9	8	7	—	—	—	9	9	9	9	9	—	—	—	9	9	9	8.5	7.5	—	—	—	9	9	8.5	7	6	—	—	—
10'-0"	9	—	—	—	—	—	—	—	9	3.5	—	—	—	—	—	—	9	8.5	7	5.5	4	—	—	—	9	7	5.5	4.5	4	—	—	—	9	9	9	9	9	—	—	—	9	9	9	8.5	7	—	—	—	9	9	8.5	7	6	—	—	—
	—	—	—	—	—	—	—	—	—	—	—	—	—	—	—	—	—	—	—	—	—	—	—	—	—	—	—	—	—	—	—	—	9	9	9	9	9	—	—	—	—	—	—	—	—	—	—	9	9	9	8	6.5	—	—	—
	9	4	—	—	—	—	—	—	9	3	—	—	—	—	—	—	9	9	7.5	6	5	—	—	—	9	9	7.5	6	5	—	—	—	9	9	9	9	9	—	—	—	9	9	8.5	6.5	5.5	—	—	—	9	7.5	6	5	4	—	—	—
	9	9	6	—	—	—	—	—	9	4.5	—	—	—	—	—	—	9	9	9	7.5	6.5	—	—	—	9	9	9	7.5	6.5	—	—	—	9	9	9	9	9	—	—	—	9	9	9	7.5	6.5	—	—	—	9	9	7.5	6.5	5.5	—	—	—
11'-0"	6.5	—	—	—	—	—	—	—	8	—	—	—	—	—	—	—	9	8	6	5	—	—	—	—	8.5	6	5	4	—	—	—	—	9	9	9	9	9	—	—	—	9	9	9	7.5	6.5	—	—	—	9	9	7.5	6.5	5.5	—	—	—
	—	—	—	—	—	—	—	—	—	—	—	—	—	—	—	—	—	—	—	—	—	—	—	—	—	—	—	—	—	—	—	—	9	9	9	9	9	—	—	—	—	—	—	—	—	—	—	9	9	8.5	7	6	—	—	—
	9	3	—	—	—	—	—	—	9	9	—	—	—	—	—	—	9	8.5	6.5	5.5	4.5	—	—	—	9	8.5	6.5	5.5	4.5	—	—	—	9	9	9	9	9	—	—	—	9	9	7	6	5	—	—	—	9	7	5.5	4.5	4	—	—	—
	7	9	4	—	—	—	—	—	7	—	—	—	—	—	—	—	9	9	9	6.5	5	—	—	—	9	9	8	6.5	5.5	—	—	—	9	9	9	9	9	—	—	—	9	9	8.5	7	6	—	—	—	9	8.5	7	5.5	5	—	—	—
12'-0"	4	—	—	—	—	—	—	—	5	—	—	—	—	—	—	—	9	7	5.5	4.5	—	—	—	—	7.5	5.5	4.5	—	—	—	—	—	9	9	9	9	—	—	—	—	9	9	8.5	7	5.5	—	—	—	9	8.5	7	5.5	—	—	—	—
	—	—	—	—	—	—	—	—	—	—	—	—	—	—	—	—	—	—	—	—	—	—	—	—	—	—	—	—	—	—	—	—	9	9	9	9	—	—	—	—	—	—	—	—	—	—	—	—	9	9	8	6.5	—	—	—	—
	5.5	—	—	—	—	—	—	—	6.5	—	—	—	—	—	—	—	9	7.5	6	5	—	—	—	—	9	7.5	6	5	—	—	—	—	9	9	9	9	—	—	—	—	9	9	6.5	5.5	—	—	—	—	8.5	6	5	4	—	—	—	—
	9	8	—	—	—	—	—	—	9	—	—	—	—	—	—	—	9	9	9	6	—	—	—	—	9	9	7.5	6	—	—	—	—	9	9	9	9	—	—	—	—	9	9	7.5	6.5	—	—	—	—	9	8	6.5	5	—	—	—	—
13'-0"	—	—	—	—	—	—	—	—	4	—	—	—	—	—	—	—	9	6.5	—	—	—	—	—	—	7	5	—	—	—	—	—	—	9	9	—	—	—	—	—	—	9	9	—	—	—	—	—	—	9	8	—	—	—	—	—	—
	—	—	—	—	—	—	—	—	—	—	—	—	—	—	—	—	—	—	—	—	—	—	—	—	—	—	—	—	—	—	—	—	9	9	—	—	—	—	—	—	—	—	—	—	—	—	—	—	9	9	—	—	—	—	—	—
	4	—	—	—	—	—	—	—	4.5	—	—	—	—	—	—	—	9	7	—	—	—	—	—	—	9	7	—	—	—	—	—	—	9	9	—	—	—	—	—	—	9	8	—	—	—	—	—	—	7.5	5.5	—	—	—	—	—	—
	9	5	—	—	—	—	—	—	5	—	—	—	—	—	—	—	9	8.5	—	—	—	—	—	—	9	8.5	—	—	—	—	—	—	9	9	—	—	—	—	—	—	9	9	—	—	—	—	—	—	9	7	—	—	—	—	—	—

FLORIDA BUILDING CODE (High Velocity Hurricane Zone)

P.E. SEAL/SIGNATURE/DATE

© 2023 TILTECO, INC.

TILTECO INC.
TILLIT TESTING & ENGINEERING COMPANY
6355 N.W. 36th. St., Ste. 305, VIRGINIA GARDENS, FLORIDA 33166
Phone : (305)871-1530 . Fax : (305)871-1531
e-mail: tilteco@aol.com
CA-0006719
WALTER A. TILLIT Jr. P.E.
FLORIDA Lic. # 44167

A.S.S.A.
American Shutter Systems Association, Inc.
4268 Westroads Drive
West Palm Beach, FL 33407

© 2020 EASTERN METAL SUPPLY, INC.

BERTHA HV™
Accordion Shutter System
H.V. BLADE #3 W/ OR W/O H.V. WINDOW BLADE #3

REV. No	DESCRIPTION	DATE	DRAWN BY: Y.M.
1	OLD 20-160	07/21/23	DATE: 07/21/2023
2			DRAWING No 23-129
3			
4			
5			SHEET 7 OF 18
6			

MAXIMUM ANCHOR+ SPACING (in.) SCHEDULE FOR A GIVEN MAX. SHUTTER SPAN, A.S.D. DESIGN NEGATIVE PRESSURE RATING AND A CORRESPONDING MOUNTING TYPE.

(SEE MOUNTINGS ON SHEETS 14 & 15).

SUBSTRATE

| MAXIMUM SPAN (ft) | SOUTHERN PINE No. 2 W/ MIN. G=0.55, DOUGLAS FIR W/ MIN. G=0.50 | | |

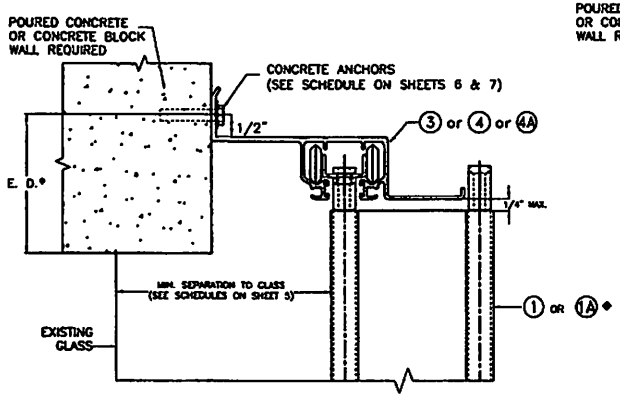

① WALL MOUNTING INSTALLATION

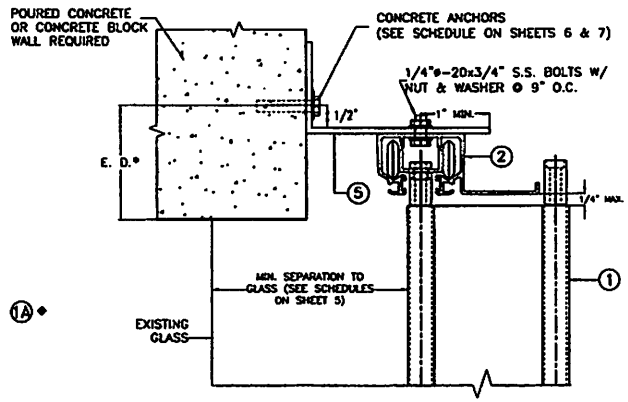

③ WALL MOUNTING INSTALLATION

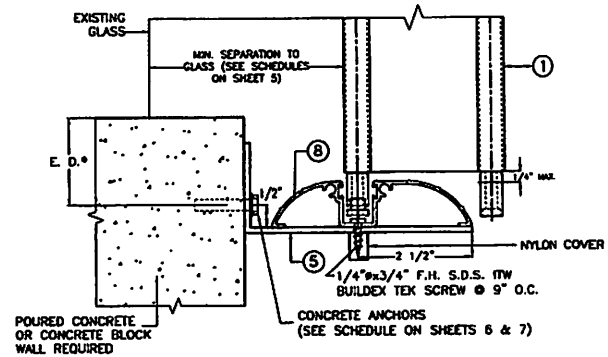

⑤ WALL MOUNTING INSTALLATION

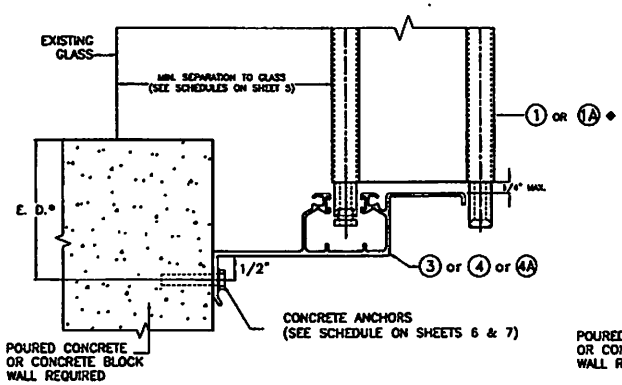

② WALL MOUNTING INSTALLATION

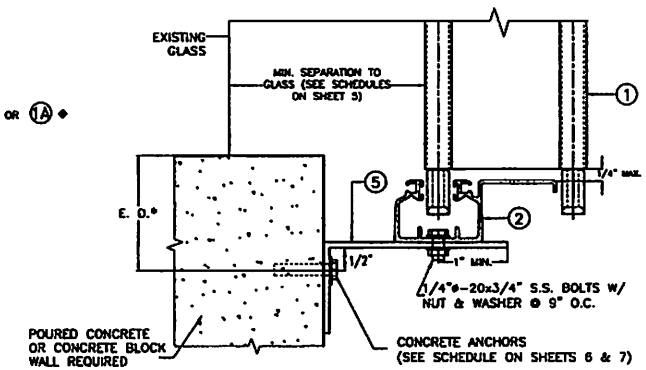

④ WALL MOUNTING INSTALLATION

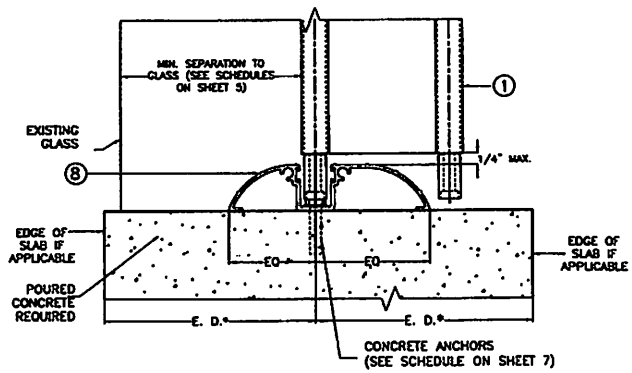

⑥ FLOOR MOUNTING INSTALLATION

NOTE FOR COMBINATION OF SECTIONS:

1- SEE SHEET 3 FOR TYPICAL SHUTTER ASSEMBLY
2- MOUNTING SECTIONS CAN BE COMBINED IN ANY WAY TO SUIT ANY INSTALLATION.

* E.D. = EDGE DISTANCE (SEE NOTES & SCHEDULE ON SHEET 7)

◆ SEE LIMITATIONS OF USE FOR BLADE ①A ON SHEET 18.

INSTALLATION DETAILS

SCALE 3/8"=1"

FLORIDA BUILDING CODE (High Velocity Hurricane Zone)

WALTER A. TILLIT JR. LICENSE No. 44167 STATE OF FLORIDA PROFESSIONAL ENGINEER 7/21/2023

P.E. SEAL/SIGNATURE/DATE

© 2023 TILTECO, INC.

TILTECO INC.
TILLIT TESTING & ENGINEERING COMPANY
6355 N.W. 36th. St., Ste. 305, VIRGINIA GARDENS, FLORIDA 33166
Phone : (305)871-1530 . Fax : (305)871-1531
e-mail: tilteco@aol.com
CA-0006719
WALTER A. TILLIT Jr. P.E.
FLORIDA Lic. # 44167

A.S.S.A.
American Shutter Systems Association, Inc.
4268 Westroads Drive
West Palm Beach, FL 33407

© 2020 EASTERN METAL SUPPLY, INC.

BERTHA HV™
Accordion Shutter System
H.V. BLADE #3 W/ OR W/O H.V. WINDOW BLADE #3

REV. No	DESCRIPTION	DATE
1	OLD 20-180	07/21/23
2		
3		
4		
5		
6		

DRAWN BY: Y.M.
DATE: 07/21/2023
DRAWING No 23-129
SHEET 9 OF 18

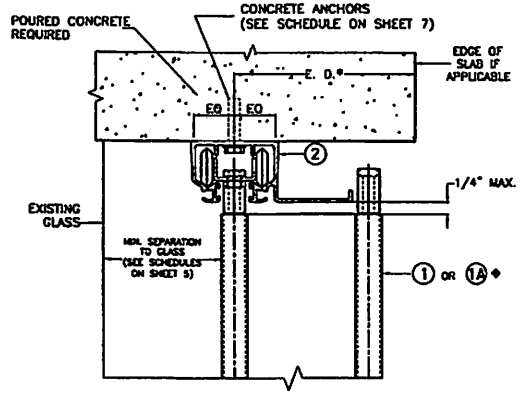

⑦ CEILING MOUNTING INSTALLATION

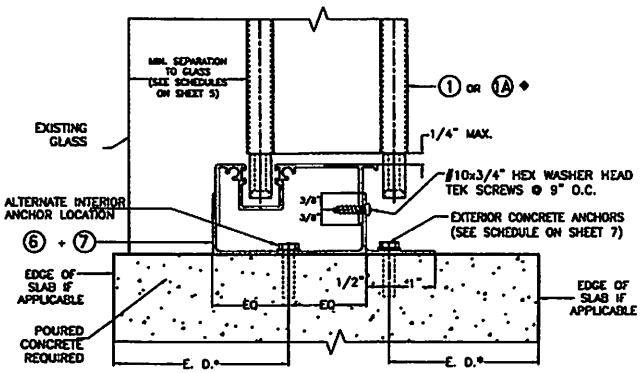

⑧ FLOOR MOUNTING INSTALLATION Ω

Ω NOTE: THIS INSTALLATION SHALL BE REMOVABLE WHEN PERFORMED ADJACENT TO AN OPERABLE EXIT OR ENTRANCE

* E.D. = EDGE DISTANCE (SEE NOTES & SCHEDULE ON SHEET 7)

NOTE FOR COMBINATION OF SECTIONS:

1- SEE SHEET 3 FOR TYPICAL SHUTTER ASSEMBLY
2- MOUNTING SECTIONS CAN BE COMBINED IN ANY WAY TO SUIT ANY INSTALLATION.

◆ SEE LIMITATIONS OF USE FOR BLADE 1A ON SHEET 18.

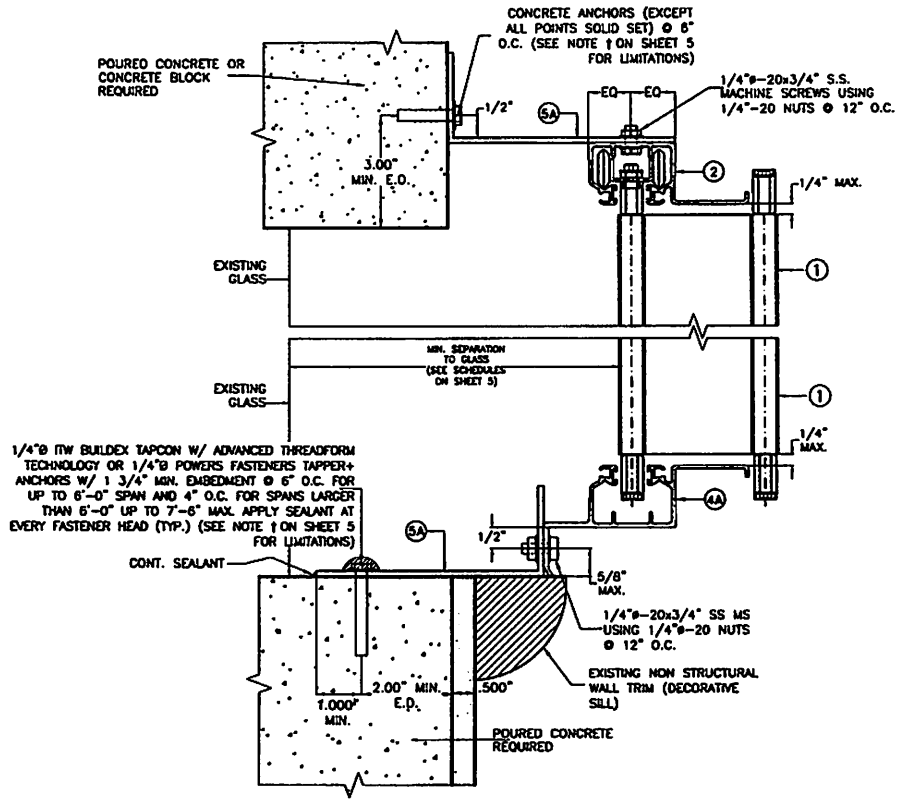

⑨ KEYSTONE MOUNTING INSTALLATION

MAXIMUM A.S.D. DESIGN PRESSURE: +64,-72 psf
MAXIMUM SHUTTER SPAN 7'-6"

INSTALLATION DETAILS (CONTINUED)

SCALE 3/8"=1"

FLORIDA BUILDING CODE (High Velocity Hurricane Zone)

WALTER A. TILLIT JR. LICENSE No. 44167 STATE OF FLORIDA PROFESSIONAL ENGINEER
7/21/2023

P.E. SEAL/SIGNATURE/DATE

© 2023 TILTECO, INC.

TILTECO INC.
TILLIT TESTING & ENGINEERING COMPANY
6355 N.W. 36th. St., Ste. 305, VIRGINIA GARDENS, FLORIDA 33166
Phone : (305)871-1530 . Fax : (305)871-1531
e-mail: tilteco@aol.com
CA-0006719
WALTER A. TILLIT Jr. P.E.
FLORIDA Lic. # 44167

A.S.S.A.
American Shutter Systems Association, Inc.
4268 Westroads Drive
West Palm Beach, FL 33407

© 2020 EASTERN METAL SUPPLY, INC.

BERTHA HV™
Accordion Shutter System
H.V. BLADE #3 W/ OR W/O H.V. WINDOW BLADE #3

REV. No	DESCRIPTION	DATE	DRAWN BY: Y.M.
1	OLD 20-140	07/21/23	DATE: 07/21/2023
2			DRAWING No
3			23-129
4			
5			SHEET
6			10 OF 18

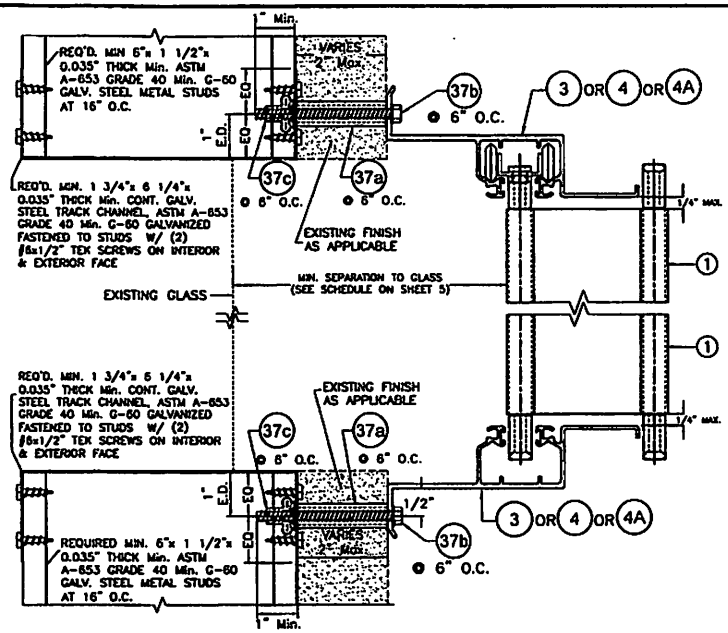

10 B.O. WALL MOUNTING INSTALLATION

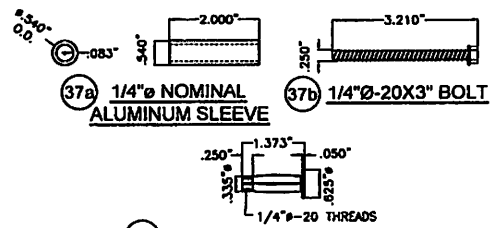

37a 1/4"ø NOMINAL ALUMINUM SLEEVE

37b 1/4"Ø-20X3" BOLT

37c 1/4"Ø ELCO CONSTRUCTION PRODUCTS FAB-LOK HD

INSTALLATION DETAILS (CONTINUED)

SCALE 3/8"=1"

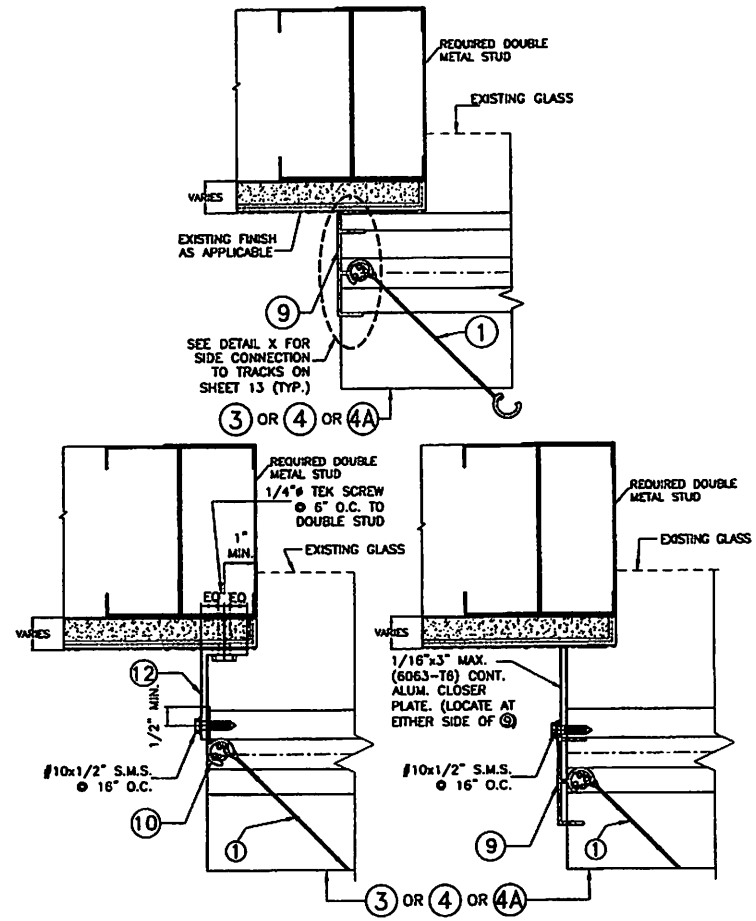

END INSTALLATION INTO METAL STUD WALL

SCALE 3/8"=1"

FLORIDA BUILDING CODE (High Velocity Hurricane Zone)

WALTER A. TILLIT LICENSE No. 44167 STATE OF FLORIDA PROFESSIONAL ENGINEER 7/26/2023

P.E. SEAL/SIGNATURE/DATE

© 2023 TILTECO, INC.

TILTECO INC.
TILLIT TESTING & ENGINEERING COMPANY
6355 N.W. 36th. St., Ste. 303, VIRGINIA GARDENS, FLORIDA 33166
Phone : (305)871-1530 . Fax : (305)871-1531
e-mail: tilteco@aol.com
CA-0006719
WALTER A. TILLIT Jr. P.E.
FLORIDA Lic. # 44167

A.S.S.A.
American Shutter Systems Association, Inc.
4268 Westroads Drive
West Palm Beach, FL 33407

© 2020 EASTERN METAL SUPPLY, INC.

BERTHA HV™
Accordion Shutter System
H.V. BLADE #3 W/ OR W/O H.V. WINDOW BLADE #3

REV. No	DESCRIPTION	DATE	DRAWN BY: Y.M.
1	OLD 20-160	07/21/23	DATE: 07/21/2023
2			DRAWING No
3			23-129
4			
5			SHEET
6			10A OF 18

INSTALLATION WITH (1) OR (1A)◆ HV BLADE W/ HV CENTERMATES (13) & (14)

SCALE 3/8"=1"

* SEE NOTES ON HV LOCK (15) AND ALTERNATE LOCKS (16) OR (17) ON SHEET 4.

◆ SEE LIMITATIONS OF USE FOR BLADE (1A) ON SHEET 18.

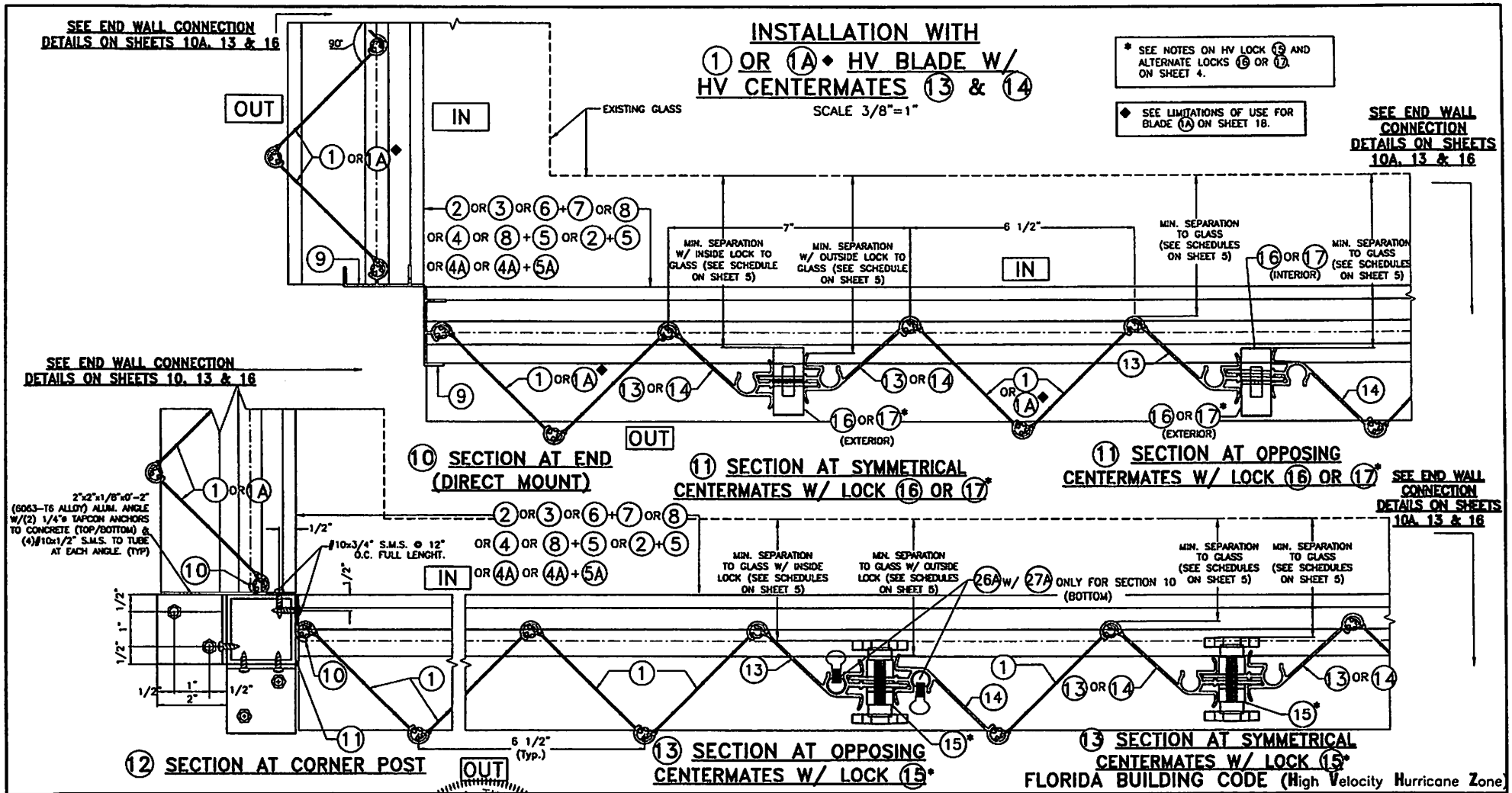

(10) SECTION AT END (DIRECT MOUNT)

(11) SECTION AT SYMMETRICAL CENTERMATES W/ LOCK (16) OR (17)*

(11) SECTION AT OPPOSING CENTERMATES W/ LOCK (16) OR (17)*

(12) SECTION AT CORNER POST

(13) SECTION AT OPPOSING CENTERMATES W/ LOCK (15)*

(13) SECTION AT SYMMETRICAL CENTERMATES W/ LOCK (15)*

FLORIDA BUILDING CODE (High Velocity Hurricane Zone)

WALTER A. TILLIT JR. LICENSE No. 44167 STATE OF FLORIDA PROFESSIONAL ENGINEER 7/21/2023

P.E. SEAL/SIGNATURE/DATE

© 2023 TILTECO, INC.

TILTECO INC.
TILLIT TESTING & ENGINEERING COMPANY
6355 N.W. 36th. St., Ste. 305, VIRGINIA GARDENS, FLORIDA 33166
Phone : (305)871-1530 . Fax : (305)871-1531
e-mail: tilteco@aol.com
CA-0006719
WALTER A. TILLIT Jr. P.E.
FLORIDA Lic. # 44167

A.S.S.A.
American Shutter Systems Association, Inc.
4268 Westroads Drive
West Palm Beach, FL 33407

© 2020 EASTERN METAL SUPPLY, INC.

BERTHA HV™
Accordion Shutter System
H.V. BLADE #3 W/ OR W/O H.V. WINDOW BLADE #3

REV. No	DESCRIPTION	DATE	DRAWN BY: Y.M.
1	OLD 20-160	07/21/23	DATE: 07/21/2023
2			DRAWING No 23-129
3			
4			
5			SHEET 11 OF 18
6			

SEE END WALL CONNECTION DETAILS ON SHEETS 10A, 13 & 16

INSTALLATION WITH ① HV BLADE W/ HV "T" LOCK CENTERMATES ⑱ & ⑲

SCALE 3/8"=1"

† SERIES 9444 ALUMINUM (2024-T3 ALLOY) LARGE FLANGE THIN SHEET NUTSERT, PART # 0820, AS MANUFACTURED BY AVDEL CHERRY TEXTORN, PARSIPPENY, NEW JERSEY 07054 OR EQUAL.

* SEE NOTES ON HV "T" LOCKS ㉑ ON SHEET 4.

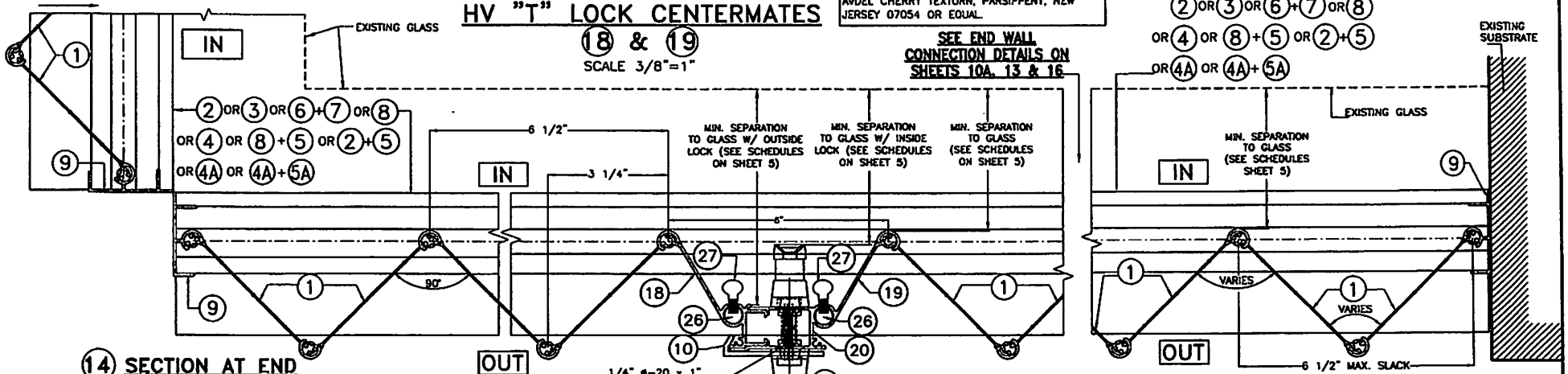

⑭ SECTION AT END (DIRECT MOUNT)

⑮ SECTION AT HV "T" LOCK CENTERMATES W/ LOCK ㉑

⑯ SECTION AT SLACK DETAIL (IF APPLICABLE)

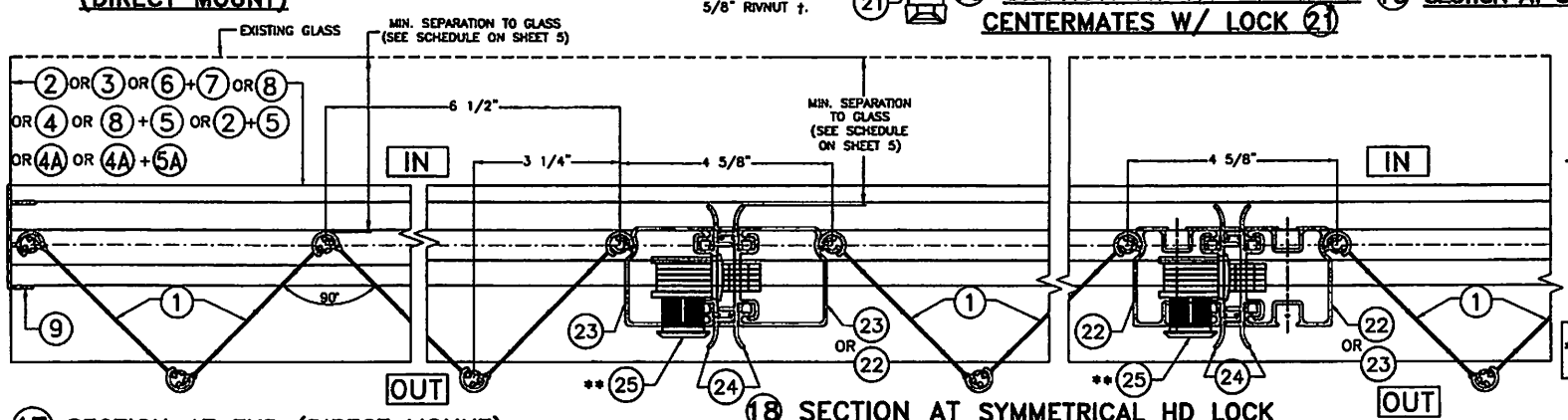

⑰ SECTION AT END (DIRECT MOUNT)

⑱ SECTION AT SYMMETRICAL HD LOCK CENTERMATES W/ HD LOCK ㉕

INSTALLATION WITH ① HV BLADE W/ HD CENTERMATES ㉒, ㉓, ㉔

SCALE 3/8"=1"

**SEE NOTES ON HD LOCKS ㉕ ON SHEET 4.

FLORIDA BUILDING CODE (High Velocity Hurricane Zone)

P.E. SEAL/SIGNATURE/DATE

© 2023 TILTECO, INC.

TILTECO INC.
TILLIT TESTING & ENGINEERING COMPANY
6355 N.W. 36th. St., Ste. 305, VIRGINIA GARDENS, FLORIDA 33166
Phone : (305)871-1530 . Fax : (305)871-1531
e-mail: tilteco@aol.com
CA-0006719
WALTER A. TILLIT Jr. P.E.
FLORIDA Lic. # 44167

A.S.S.A.
American Shutter Systems Association, Inc.
4268 Westroads Drive
West Palm Beach, FL 33407

© 2020 EASTERN METAL SUPPLY, INC.

BERTHA HV™
Accordion Shutter System
H.V. BLADE #3 W/ OR W/O H.V. WINDOW BLADE #3

REV. No	DESCRIPTION	DATE	DRAWN BY: Y.M.
1	OLD 20-160	07/21/23	DATE: 07/21/2023
2			DRAWING No
3			23-129
4			
5			SHEET
6			12 OF 18

END INSTALLATION INTO CONCRETE OR CONCRETE BLOCK WALL◆

SCALE 3/8"=1"

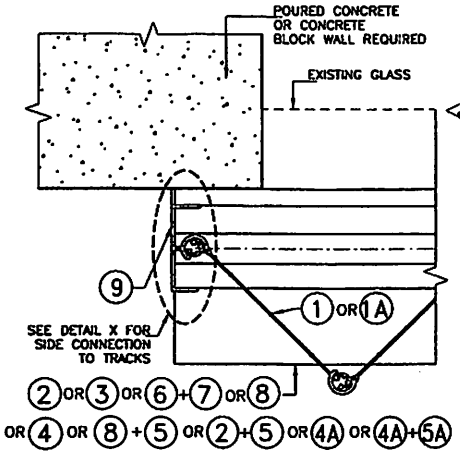

1 END CONNECTION DETAIL

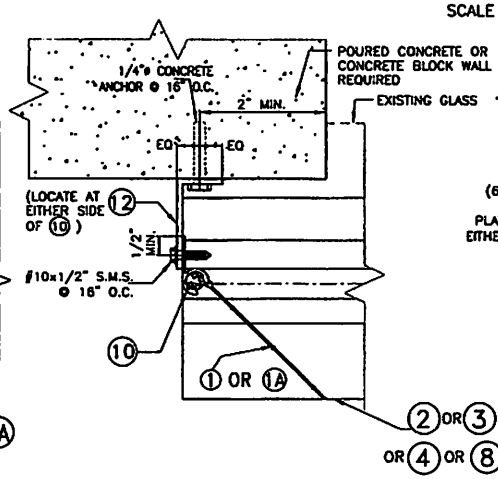

2 END CONNECTION DETAIL

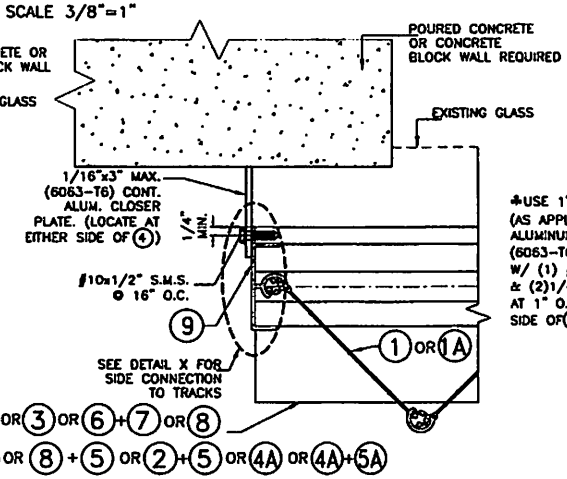

3 END CONNECTION DETAIL

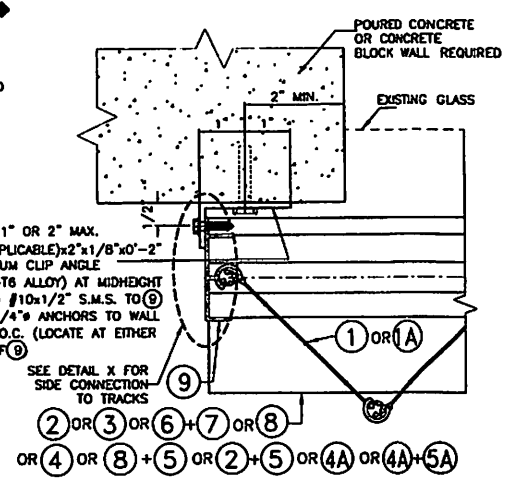

4 END CONNECTION DETAIL

♣ REQUIRED ONLY FOR SPANS GREATER THAN 12'-0"

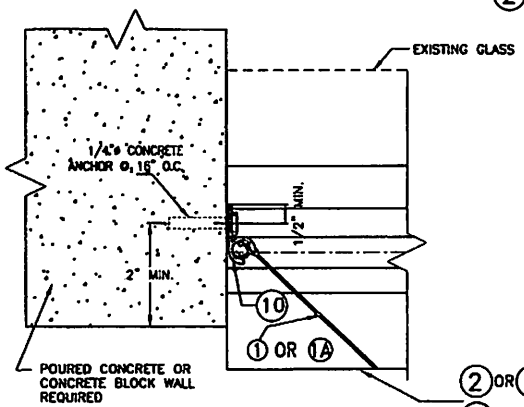

5 END CONNECTION DETAIL

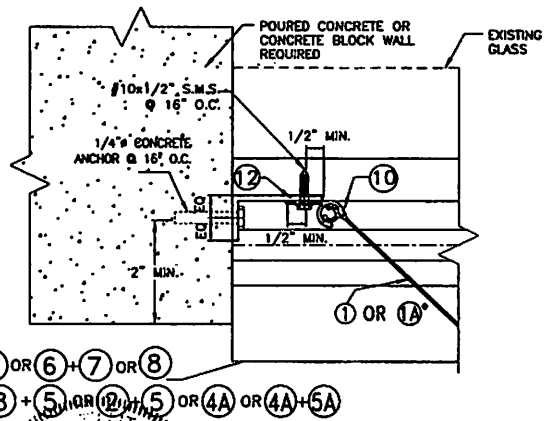

6 END CONNECTION DETAIL

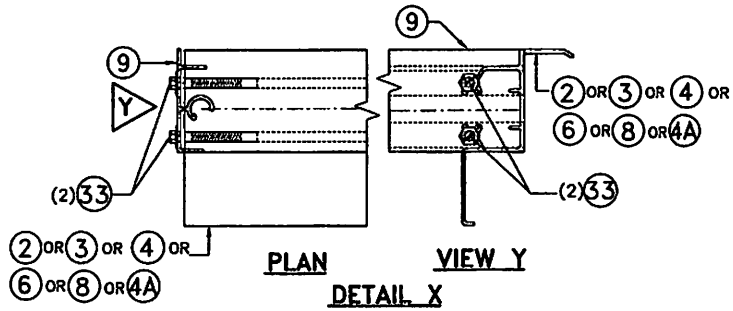

◆ SEE LIMITATIONS OF USE FOR BLADE 1A ON SHEET 18.

FLORIDA BUILDING CODE (High Velocity Hurricane Zone)

P.E. SEAL/SIGNATURE/DATE

© 2023 TILTECO, INC.

TILTECO INC.
TILLIT TESTING & ENGINEERING COMPANY
6355 N.W. 36th. St., Ste. 305, VIRGINIA GARDENS, FLORIDA 33166
Phone : (305)871-1530 . Fax : (305)871-1531
e-mail: tilteco@aol.com
CA-0006719
WALTER A. TILLIT Jr. P.E.
FLORIDA Lic. # 44167

A.S.S.A.
American Shutter Systems Association, Inc.
4268 Westroads Drive
West Palm Beach, FL 33407

© 2020 EASTERN METAL SUPPLY, INC.

BERTHA HV™
Accordion Shutter System
H.V. BLADE #3 W/ OR W/O H.V. WINDOW BLADE #3

REV. No	DESCRIPTION	DATE	DRAWN BY: Y.M.
1	OLD 20-160	07/21/23	DATE: 07/21/2023
2			DRAWING No 23-129
3			
4			
5			SHEET 13 OF 18
6			

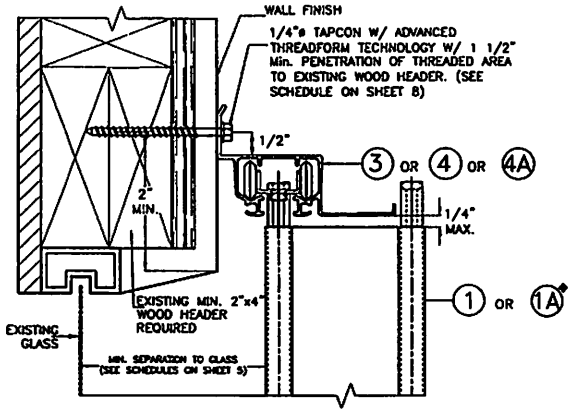

1W WALL CONNECTION AT TOP

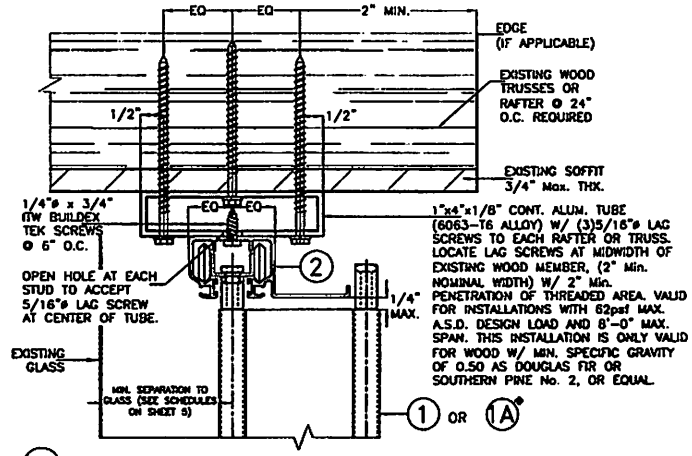

2W HOLLOW CEILING MOUNTING INSTALLATION

MAXIMUM DESIGN PRESSURE: ±62 psf
MAXIMUM SHUTTER SPAN 8'-0"

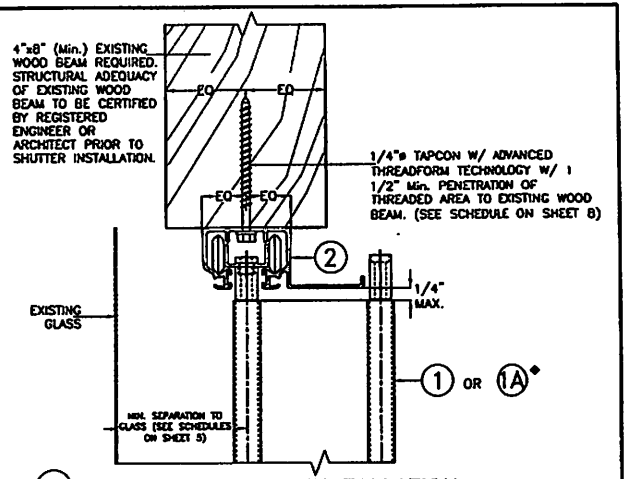

3W SOFFIT MOUNTING INSTALLATION

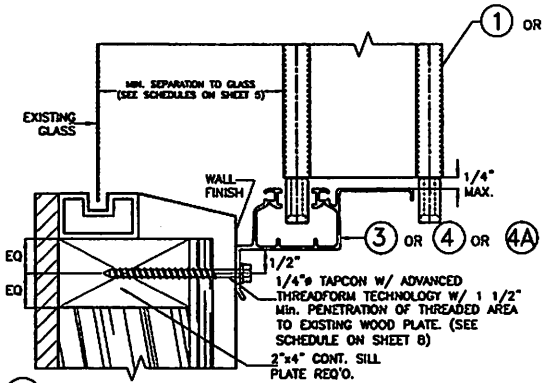

4W WALL CONNECTION AT BOTTOM

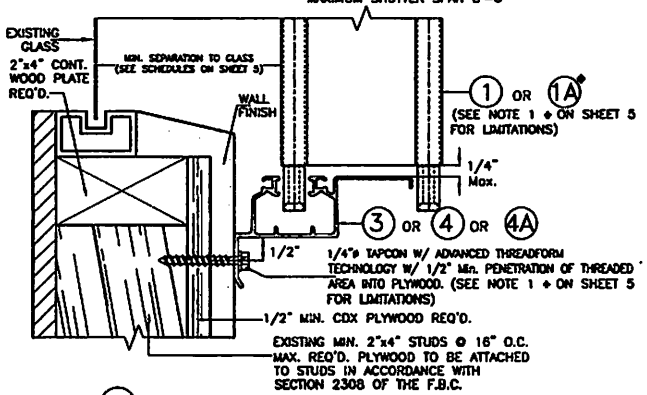

5W WALL CONNECTION AT BOTTOM

MAXIMUM DESIGN PRESSURE: ±62 psf
MAXIMUM SHUTTER SPAN 8'-11"

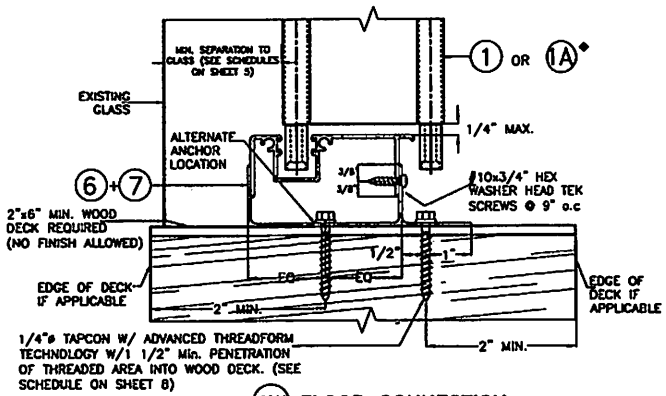

6W FLOOR CONNECTION

NOTE:
1-SEE SHEET 3 FOR TYPICAL SHUTTER ASSEMBLY
2-MOUNTING SECTIONS CAN BE COMBINED IN ANY WAY TO SUIT ANY INSTALLATION.

◆SEE LIMITATIONS OF USE FOR BLADE (1A) ON SHEET 18.

INSTALLATION DETAILS ON EXISTING WOOD BUILDINGS

SCALE 3/8"=1"

FLORIDA BUILDING CODE (High Velocity Hurricane Zone)

WALTER A. TILLIT JR. LICENSE No. 44167 STATE OF FLORIDA PROFESSIONAL ENGINEER 07/21/2023

P.E. SEAL/SIGNATURE/DATE

© 2023 TILTECO, INC.

TILTECO INC.
TILLIT TESTING & ENGINEERING COMPANY
6355 N.W. 36th. St., Ste. 305, VIRGINIA GARDENS, FLORIDA 33166
Phone : (305)871-1530 . Fax : (305)871-1531
e-mail: tilteco@aol.com
CA-0006719
WALTER A. TILLIT Jr. P.E.
FLORIDA Lic. # 44167

A.S.S.A.
American Shutter Systems Association, Inc.
4268 Westroads Drive
West Palm Beach, FL 33407

© 2020 EASTERN METAL SUPPLY, INC.

BERTHA HV™
Accordion Shutter System
H.V. BLADE #3 W/ OR W/O H.V. WINDOW BLADE #3

REV. No	DESCRIPTION	DATE	DRAWN BY: Y.M.
1	OLD 20-160	07/21/23	DATE: 07/21/2023
2			DRAWING No
3			23-129
4			
5			SHEET
6			14 OF 18

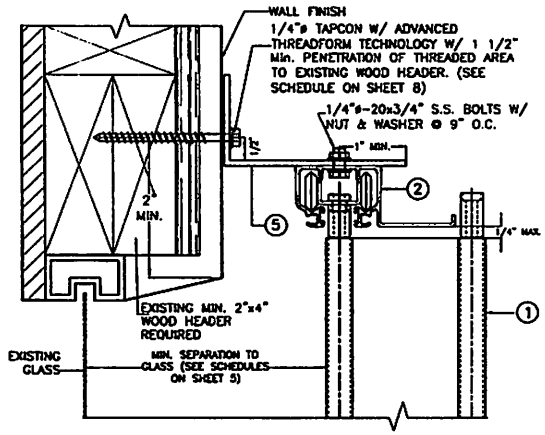

7W WALL MOUNTING INSTALLATION

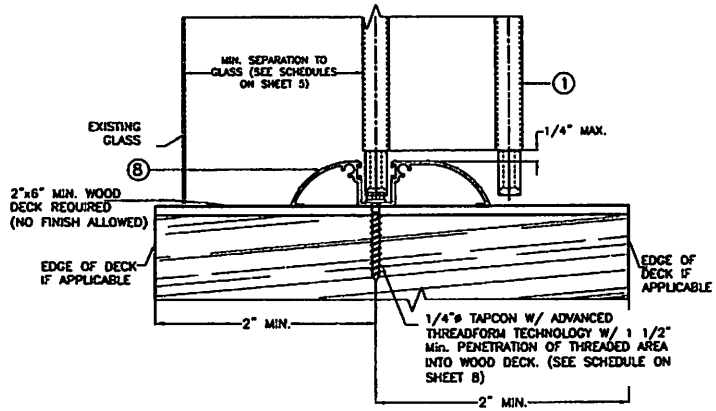

8W FLOOR CONNECTION

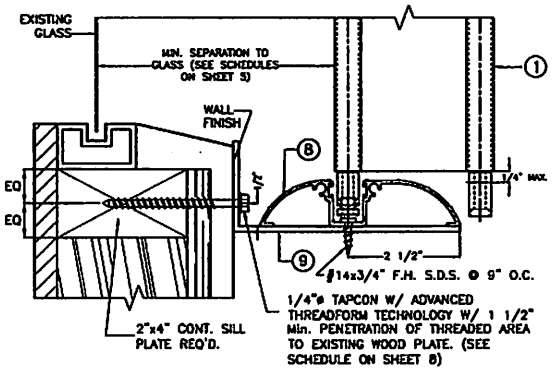

9W WALL MOUNTING INSTALLATION

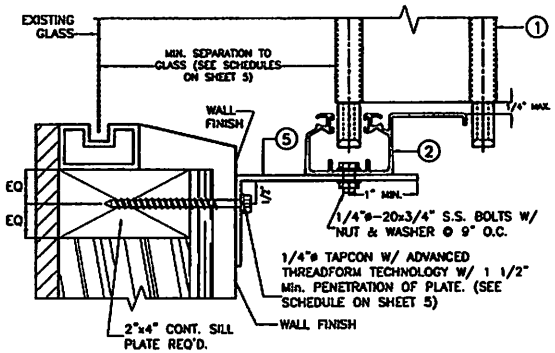

10W WALL MOUNTING INSTALLATION

NOTE:
1-SEE SHEET 3 FOR TYPICAL SHUTTER ASSEMBLY
2-MOUNTING SECTIONS CAN BE COMBINED IN ANY WAY TO SUIT ANY INSTALLATION.

INSTALLATION DETAILS ON EXISTING WOOD BUILDINGS

SCALE 3/8"=1"

FLORIDA BUILDING CODE (High Velocity Hurricane Zone)

WALTER A. TILLIT JR. STATE OF FLORIDA LICENSE No. 44167 PROFESSIONAL ENGINEER

P.E. SEAL/SIGNATURE/DATE

© 2023 TILTECO, INC.

TILTECO INC.
TILLIT TESTING & ENGINEERING COMPANY
6355 N.W. 36th. St., Ste. 305, VIRGINIA GARDENS, FLORIDA 33166
Phone : (305)871-1530 . Fax : (305)871-1531
e-mail: tiltecc@aol.com
CA-0006715
WALTER A. TILLIT Jr. P.E.
FLORIDA Lic. # 44167

A.S.S.A.
American Shutter Systems Association, Inc.
4268 Westroads Drive
West Palm Beach, FL 33407

© 2020 EASTERN METAL SUPPLY, INC.

BERTHA HV™
Accordion Shutter System
H.V. BLADE #3 W/ OR W/O H.V. WINDOW BLADE #3

REV. No	DESCRIPTION	DATE	DRAWN BY: Y.M.
1	OLD 20-160	07/21/23	DATE: 07/21/2023
2			DRAWING No
3			23-129
4			
5			SHEET
6			15 OF 18

END INSTALLATION INTO 2"x4" MIN. WOOD STUDS◆

SCALE 3/8"=1"

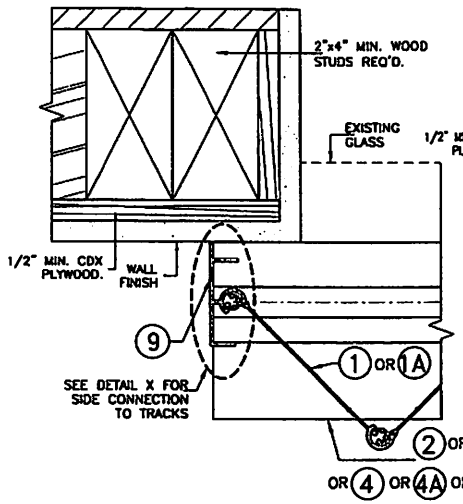

① END CONNECTION DETAIL

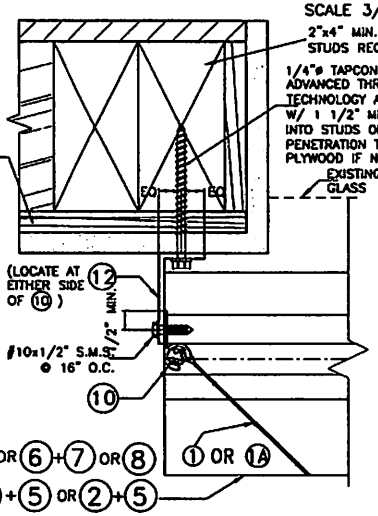

② END CONNECTION DETAIL

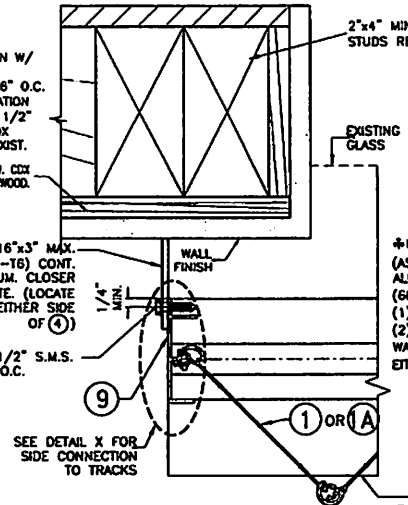

③ END CONNECTION DETAIL

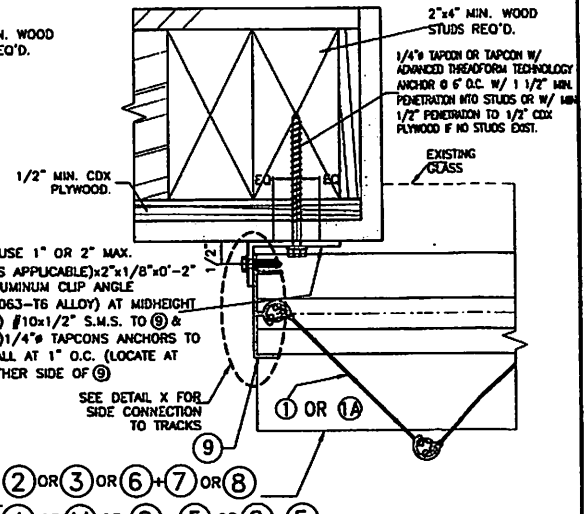

④ END CONNECTION DETAIL

✚ REQUIRED ONLY FOR SPANS GREATER THAN 12'-0"

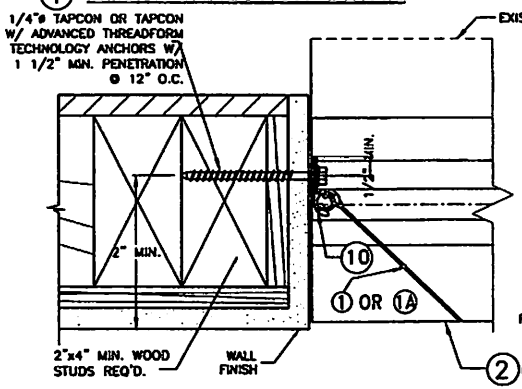

⑤ END CONNECTION DETAIL

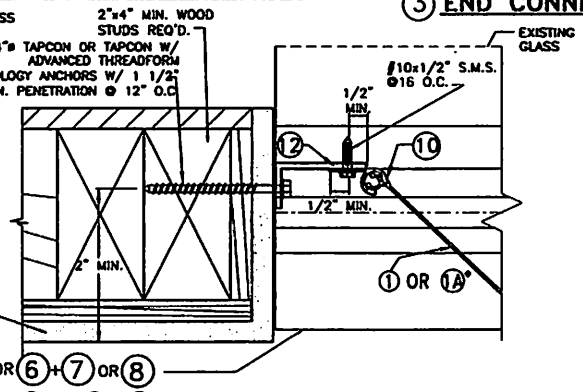

⑥ END CONNECTION DETAIL

◆ SEE LIMITATIONS OF USE FOR BLADE 1A ON SHEET 18.

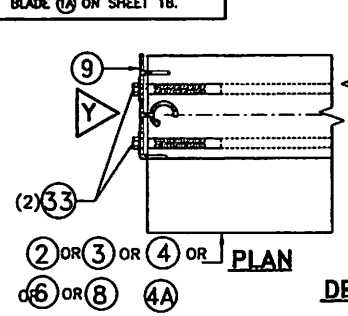

PLAN

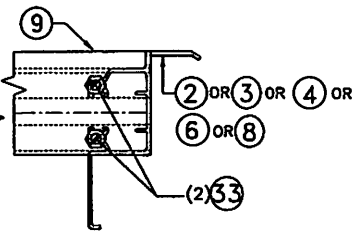

VIEW Y

DETAIL X

FLORIDA BUILDING CODE (High Velocity Hurricane Zone)

WALTER A. TILLIT JR. LICENSE No 44167 STATE OF FLORIDA PROFESSIONAL ENGINEER

P.E. SEAL/SIGNATURE/DATE 07/21/2023

© 2023 TILTECO, INC.

TILTECO INC.
TILLIT TESTING & ENGINEERING COMPANY
6355 N.W. 36th St., Ste. 305, VIRGINIA GARDENS, FLORIDA 33166
Phone : (305)871-1530 . Fax : (305)871-1531
e-mail: tilteco@aol.com
CA-0006719
WALTER A. TILLIT Jr. P.E.
FLORIDA Lic. # 44167

A.S.S.A.
American Shutter Systems Association, Inc.
4268 Westroads Drive
West Palm Beach, FL 33407

© 2020 EASTERN METAL SUPPLY, INC.

BERTHA HV™
Accordion Shutter System
H.V. BLADE #3 W/ OR W/O H.V. WINDOW BLADE #3

REV. No	DESCRIPTION	DATE	DRAWN BY: Y.M.
1	OLD 20-190	07/21/23	DATE: 07/21/2023
2			DRAWING No 23-129
3			
4			
5			SHEET 16 OF 18
6			

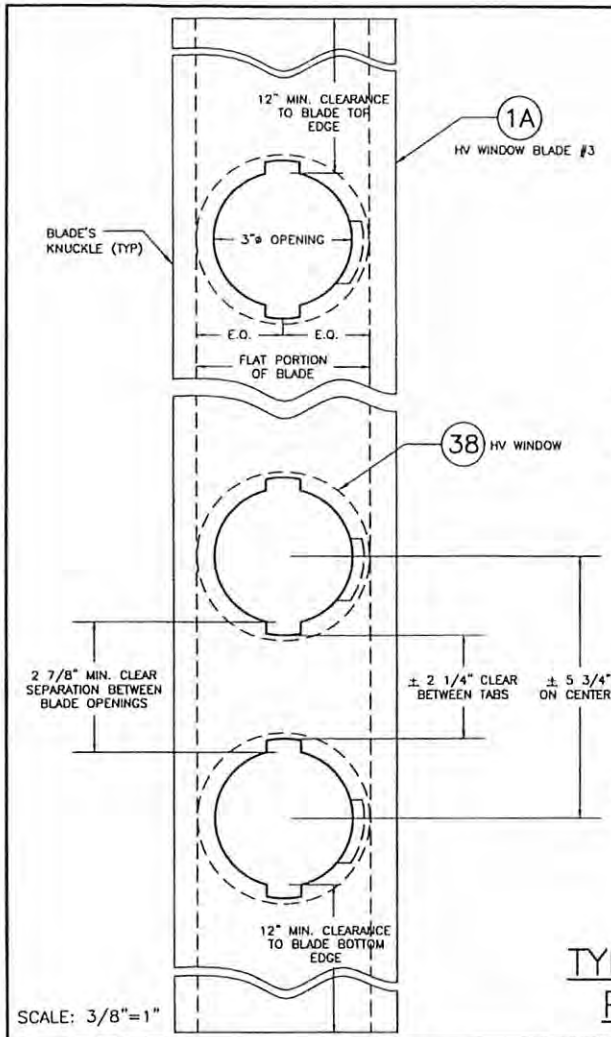

SCALE: 3/8"=1"

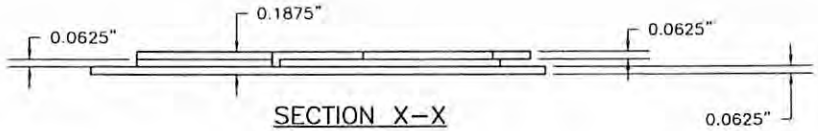

SECTION X–X

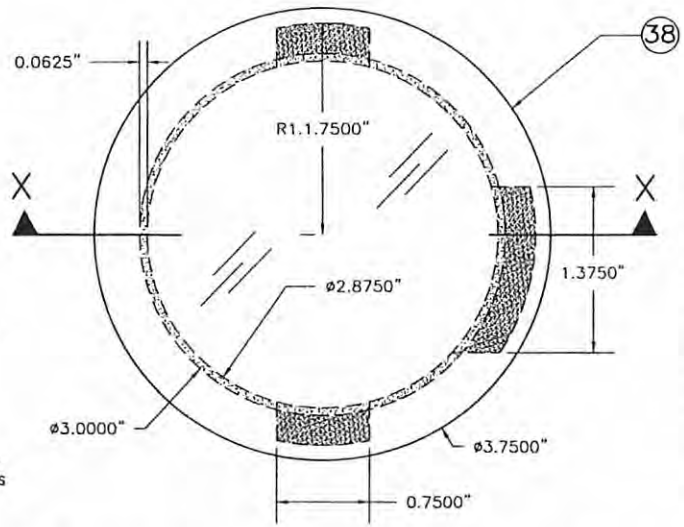

38 POLYCARBONATE IMPACT RESISTANT HV WINDOW

BAYER MAKROLON 3103 POLYCARBONATE RESINS, UV–STABILIZED GRADE

EXTERIOR ELEVATION

SCALE: 1" = 1"

POLYCARBONATE SOURCES FOR 38

TYPICAL PROPERTIES	APPLICABLE STANDARD REFERENCE	RESULT	
		BAYER MATERIAL/SCIENCE LLC. MAKROLON 3103	SABIC INNOVATIVE PLASTIC LEXAN 103 RESIN
PHYSICAL:			
SPECIFIC GRAVITY	ASTM D792	0.043 lb/in³	0.043 lb/in³
MECHANICAL:			
TENSILE YIELD STRENGTH	ASTM D638	9,400 p.s.i.	9,500 p.s.i.
FLEXURAL STRENGTH AT YIELD	ASTM D790	12,500 p.s.i.	13,400 p.s.i.
FLEXURAL MODULUS	ASTM D790	340,000 p.s.i.	345,000 p.s.i.
IMPACT:			
NOTCHED IZOD	ASTM D256	18 FT–lb/in	17 FT–lb/in
FIRE BURNING CHARACTERISTICS:			
SMOKE DENSITY	ASTM D2843	47.2 %	64.5 % MAX.
RATE OF BURNING	ASTM D635	C–1 CLASS	C–1 CLASS
SELF IGNITION	ASTM D1929	1040 °F	980 °F
WEATHERING:	ASTM G155		
TENSILE STRENGTH AFTER WEATHERING	ASTM 638	9302 p.s.i.	8840 p.s.i.
TENSILE STRESS BEFORE WEATHERING	ASTM 638	8461 p.s.i.	8880 p.s.i.

TYPICAL 1A HV WINDOW BLADE #3 AND POLYCARBONATE HV WINDOW DETAIL

FLORIDA BUILDING CODE (High Velocity Hurricane Zone)

WALTER A. TILLIT JR. LICENSE No. 44167 STATE OF FLORIDA PROFESSIONAL ENGINEER
7/21/2023

P.E. SEAL/SIGNATURE/DATE

© 2023 TILTECO, INC.

TILTECO INC.
TILLIT TESTING & ENGINEERING COMPANY
6355 N.W. 36th. St., Ste. 305, VIRGINIA GARDENS, FLORIDA 33166
Phone : (305)871–1530 . Fax : (305)871–1531
e–mail: tilteco@aol.com
CA–0006719
WALTER A. TILLIT Jr. P.E.
FLORIDA Lic. # 44167

A.S.S.A.
American Shutter Systems Association, Inc.
4268 Westroads Drive
West Palm Beach, FL 33407

© 2020 EASTERN METAL SUPPLY, INC.

BERTHA HV™
Accordion Shutter System
H.V. BLADE #3 W/ OR W/O H.V. WINDOW BLADE #3

REV. No	DESCRIPTION	DATE
1	OLD 20–160	07/21/23
2		
3		
4		
5		
6		

DRAWN BY: Y.M.
DATE: 07/21/2023
DRAWING No 23–129
SHEET 17 OF 18

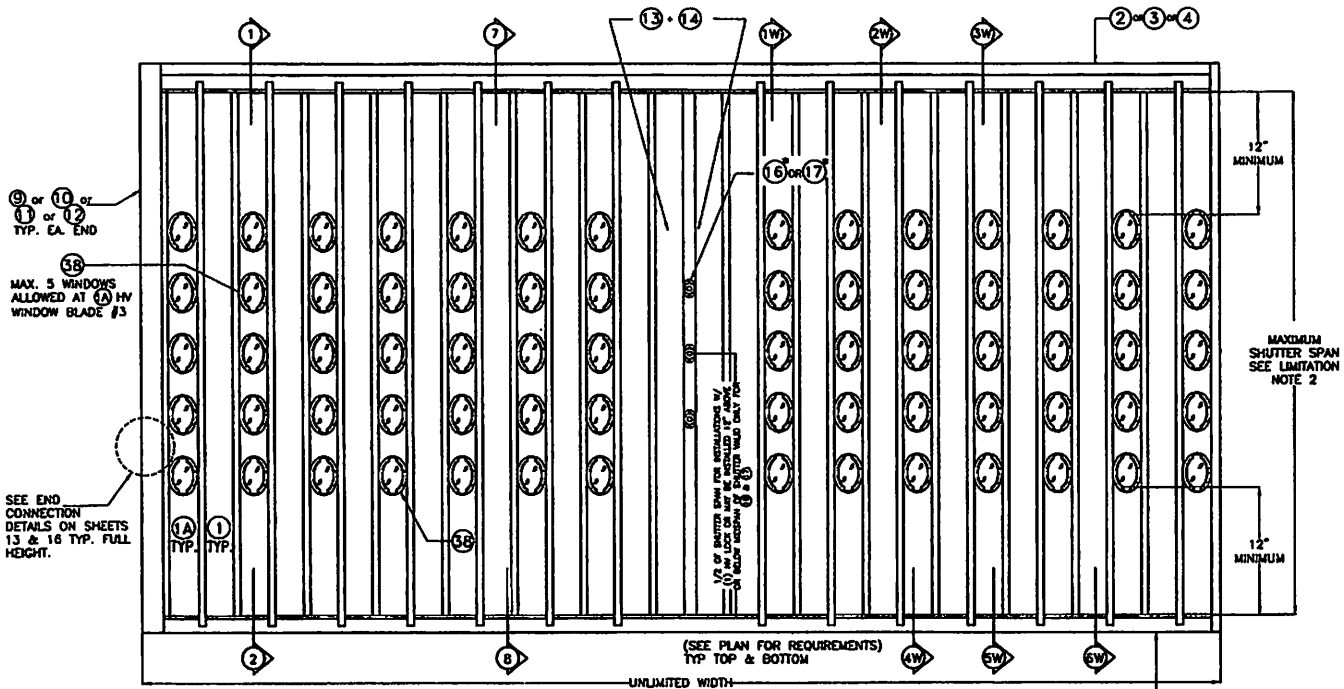

ELEVATION

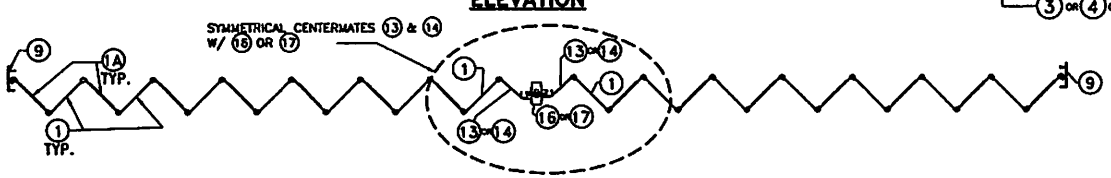

PLAN

1 TYPICAL HV BLADE #3 WORKING IN UNISON WITH 1A HV WINDOW BLADE #3 SHUTTER*

N.T.S.

*** GENERAL LIMITATIONS AND CONDITIONS OF USE FOR BERTHA 1 HV BLADE #3 ACCORDION SHUTTER SYSTEM WORKING IN UNISON WITH 1A HV WINDOW BLADE #3.**

1. MAX. A.S.D. DESIGN PRESSURE RATING: +62, −62 p.s.f.

2. MAX. SHUTTER SPAN: 107" = 8'−11" @ +62, −62 psf
   MAX. SHUTTER SPAN: 114" = 9'−6" @ +55, −55 psf

3. ALLOWED MOUNTINGS: 1, 2, 7 & 8 ON SHEETS 9 & 10; AS WELL AS MOUNTINGS 1W, 2W, 3W, 4W, 5W & 6W ON SHEET 14.

4. ONLY CENTERMATES 13, 14 (BOTH W/ 16 OR 17) ARE ALLOWED WITH 13, 14 ARRANGED IN A SYMMETRICAL LAYOUT.

5. (A) 1A HV WINDOW BLADE #3 SHALL ONLY ALLOW A MAXIMUM OF 5 OPENINGS (3"ø HOLES) FOR 38 PER BLADE AT SPACINGS SHOWN ON SHEET 17.

   (B) MIN. CLEARANCE FROM TOP OR BOTTOM EDGE OF 1A HV WINDOW BLADE #3 OF ANY 3"ø HOLE FOR 38 SHALL BE 12".

   (C) FIRST OR LAST BLADE COMING OUT FROM STARTERS AT ENDS MAY BE 1A HV WINDOW BLADE #3.

   (D) 1A HV WINDOW BLADE #3 MUST BE USED ALTERNATE TO A SOLID 1 HV BLADE #3 THROUGHOUT SHUTTER'S WIDTH.

   (E) CENTERMATES SHALL ALWAYS BE INSTALLED ADJACENT TO A SOLID 1 HV BLADE #3 AT EITHER SIDE OF THEM.

   (F) POLYCARBONATE HV WINDOW 38 SHALL BE INSTALLED SO THAT TABS FACE THE INTERIOR OF THE OPENING BEING PROTECTED. HV WINDOW 38 MUST BE ONLY INSTALLED AND LOCKED USING A HV SETTING TOOL PROVIDED BY ASSA, INC.

6. SEE ANCHOR SPACING SCHEDULE FOR INSTALLATIONS INTO WOOD FRAME BUILDINGS ON SHEET 8, AS LIMITED BY SPAN AND DESIGN LOAD (SEE NOTES 1 & 2 ABOVE).

7. SEE ANCHOR SPACING SCHEDULE FOR INSTALLATIONS INTO POURED CONCRETE OR CONCRETE BLOCK WALL ON SHEETS 6 & 7 AS LIMITED BY SPAN AND DESIGN LOAD (SEE NOTES 1 & 2 ABOVE).

8. SEE MINIMUM SEPARATION TO GLASS ON SHEET 5.

FLORIDA BUILDING CODE (High Velocity Hurricane Zone)

WALTER A. TILLIT JR. LICENSE No. 44167 STATE OF FLORIDA PROFESSIONAL ENGINEER 2023

P.E. SEAL/SIGNATURE/DATE

© 2023 TILTECO, INC.

TILTECO INC.
TILLIT TESTING & ENGINEERING COMPANY
6355 N.W. 36th. St., Ste. 305, VIRGINIA GARDENS, FLORIDA 33166
Phone : (305)871-1530 . Fax : (305)871-1531
e-mail: tilteco@aol.com
CA-0006719
WALTER A. TILLIT Jr. P.E.
FLORIDA Lic. # 44167

A.S.S.A.
American Shutter Systems Association, Inc.
4268 Westroads Drive
West Palm Beach, FL 33407

© 2020 EASTERN METAL SUPPLY, INC.

BERTHA HV™
Accordion Shutter System
H.V. BLADE #3 W/ OR W/O H.V. WINDOW BLADE #3

REV. No	DESCRIPTION	DATE	DRAWN BY: Y.M.
1	OLD 20-160	07/21/23	DATE: 07/21/2023
2			DRAWING No
3			23-129
4			
5			SHEET
6			18 OF 18